ALASKA REGIONAL FIRE TRAINING CENTER
BUILDING REHABILITATION
KENAI, ALASKA

BID DOCUMENTS **JULY 31, 2019**

STATE MAP

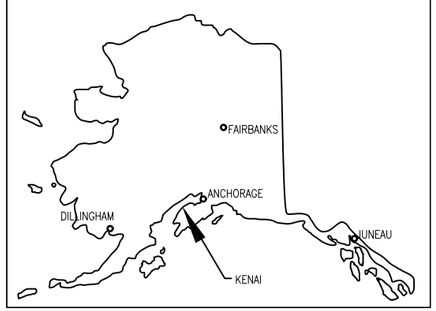

VICINITY MAP

NOTE: These maps identify project location. They are not to scale.

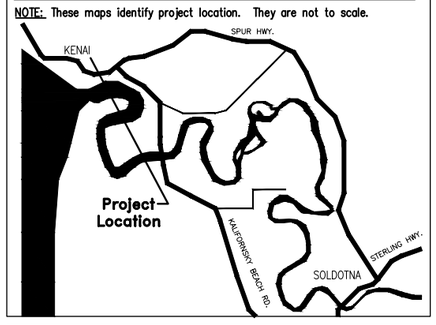

KENAI MAP

NOTE: Map not to Scale

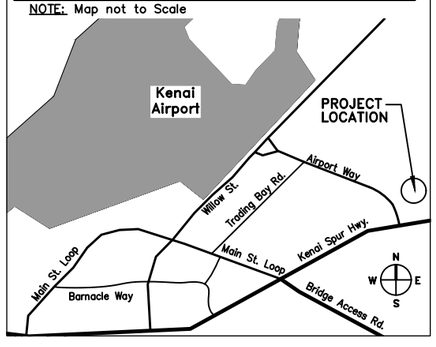

ABBREVIATIONS LIST

ABV Above
AFF Above Finished Floor
AC Acoustical
ACT Acoustical Tile
ADAAG Americans w/ Disabilities Act Accessible Guidelines

ADD Addendum
ADH Adhesive
ADJ Adjacent
AGG Aggregate
A/C Air Conditioning
ALT Alternate
AL Aluminum
ANC Anchorage
AB Anchor Bolt
ANOD Anodized
ARCH Architectural
ASPH Asphalt
ASS'Y Assembly
A.W.W. All Weather Wood

BCS Baby Changing Station
BRG Bearing
BM Bench Mark
BLK Block
BLKG Blocking
BO Board
BOT Bottom
BRK Brick
BRNZ Dark Bronze
BLDG Building
BUR Built-Up Roofing

CAB Cabinet
CFMU Conc. Form Masonry Unit
CPT Carpet
CSMT Casement
CI Cast Iron
CK Caulk
CLG Ceiling
CEM Cement
CL Center Line
CER Ceramic
CT Ceramic Tile
CIR Circle
CJ Control Joint
CLG Ceiling
CLR Clear
CLS Closure
COL Column
COMB Combination
CONC Concrete
COTF Clean Out Thru Floor
CMU Concrete Masonry Unit
CFMU Concrete Form Masonry Unit
CONST Construction
CONT Continuous
CONTR Contract
CORR Corrugated
CTR Counter
CFL Counterflushing
CRS Course

DEM Demolish
DEP Depressed
DTL Detail
DIAG Diagonal
DIAM Diameter
DIM Dimension
DIV Division
DR Door
DH Double Hung
DWG Drawing
DF Drinking Fountain
DW Dumb Waiter

EIFS Exterior Insulation Finish System
EL Elevation
ELEC Electrical
ELEV Elevator
ENC Enclosure
EQ Equal
EST Estimate
EXG Existing
EXH Exhaust
EXP Exposed
EXT Exterior
EXTING Extinguisher

FBRK Fire Brick
FCO Floor Clean Out
FD Floor Drain
FE Fire Extinguisher
FEC Fire Extinguisher Cabinet
FF Factory Finish
FFL Finished Floor Line
FFW Finish Face of Wall
FG Finish Grade
FIXT Fixture
FLG Flashing
FLR Floor
FLUR Fluorescent
FN Finish
FND Foundation
FOC Face Of Concrete
FOF Face Of Finish
FOM Face Of Masonry
FOS Face Of Structure
FP Fireproof
FPL Fireplace
FR Frame
FRP Fiberglass Reinforcing Panel
FS Floor Sink
FTG Footing

GA Gauge
GALV Galvanized
GB Grab Bar
GD Grade
GI Galvanized Iron
GL Glass
GLB Glu-Lam Beam
GP Galvanized Pipe
GT Grout
GVL Gravel
GWB Gypsum Wall Board

HB Hose Bibb
HC Hollow Core
HDR Header
HDW Hardware
HM Hollow Metal
HOR Horizontal
HPL High Pressure
HR Hour
HT Height
HTG Heating
HVAC Heating/Ventil./Air Cond.
HWD Hardwood
HWH Hot Water Heater

IB Infiltration Barrier INCL Include
INS Insulate
INT Interior

JT Joint

KIT Kitchen
KO Knockout
KPL Kickplate Laminate

LBL Label
LAM Laminate
LAV Lavatory
LT Light
LTL Lintel
LVR Louver

MB Machine Bolt
MFR Manufacturer
MAS Masonry
M.O. Masonry Opening
MTL Material
MAX Maximum
MECH Mechanical
MC Medicine Cabinet
MED Medium
MBR Member
ML Measuring Line
MMB Membrane
MET Metal
MIN Minimum
MIR Mirror
MISC Miscellaneous
MOD Modular
MNAP Manifold Access Panel
MR Moisture Resistant
MULL Mullion

NAT Natural
ND Napkin Disposal
NOM Nominal North
NIC Not In Contract
NFS Non-Frost Susceptible
NTS Not To Scale

OBS Obscure
OC On Center
OPCI Owner Provided Contractor Installed
OPG Opening
OPP Opposite
OD Outside Diameter
OA Outside Air
O.F.D. Overflow Drain
OH Over Head

PNL Panel
PB Panic Bar
PAR Parallel
PK Parking
PED Pedestal
PLAM Plastic Laminate
PL Plate
PLYWD Plywood
PT Point
PTD. Painted, Paper Towel Dispenser
PSF Pounds Per Square Foot
PSI Pounds Per Square Inch
PVMT Pavement
PL Property Line
PVB Poly Vapor Barrier

RAD Radius
R&S Rod And Shelf
RFL Reflective
REC. Recommendation
REFR Refrigerator
RES Resilient
RET Return
RA Return Air
RVS Reverse Side
REV Revised
ROW Right Of Way
RD Roof Drain
RO Rough Opening
RB Rubber Base

RL Rain Leader
RM Radiant Manifold

SAT Satellite
SC Specimen Cabinet
SCD Seat Cover Dispenser
SCH Schedule
SD Soap Dispenser
SNT Sealant
SEC Section
SHTH Sheathing
SHT Sheet
SH Soap Holder
SIM Similar
SKL Skylight
SC Solid Core
SPK Speaker
SPL Special
SPEC Specification
SQ Square
SST Stainless Steel
STD Standard
ST Steel
STO Storage
STR Structural
SUSP Suspended

TEL Telephone
TV Television
THK Thick
TPTN Toilet Partition
T.O. Top Of
TOL Tolerance
T&G Tongue & Groove
TPD Toilet Paper Dispenser
TSL Top Of Slab
TST Top of Steel
TW Top Of Wall
TYP Typical

UC Undercut
UNF Unfinished
UON Unless Otherwise Noted
UPS Uninterrupted Power Supply

VB Vapor Barrier
VG Vertical Grain
VIF Verify in Field
VIN Vinyl
VINB Vinyl Base
VCT Vinyl Composition Tile
VF Vinyl Fabric
VT Vinyl Tile
VTR Vent Thru Roof

WSCT Wainscot
WH Wall Hung
WC Water Closet
WP Waterproofing
WR Water Resistant
WS Waterstop
WWF Welded Wire Fabric
WIN Window
WD Wood
WB Wood Base

GENERAL NOTES

1.) DIMENSIONAL HIERARCHY
   a. AS SPECIFICALLY NOTED
   b. GRID LINES
   c. FACE OR TOP OF CONCRETE
   d. FACE OR TOP OF CMU
   e. FACE OF FRAMING
   f. FACE OF HOLLOW METAL FRAMES

2.) CONTRACTOR SHALL NOTIFY ARCHITECT OF ANY AMBIGUITIES OR CONTRADICTIONS IN THESE DOCUMENTS PRIOR TO PROCEEDING IN EACH AREA.

3.) ARCHITECTURAL DRAWINGS REFERENCE ALL WORK FROM FINISH FLOOR ELEVATION OF 100'-0". SEE CIVIL FOR SITE LAYOUT DATUM.

4.) SOME DETAILS ARE DIAGRAMMATIC IN NATURE. IT IS THE CONTRACTORS RESPONSIBILITY TO PROVIDE A COMPLETE AND FUNCTIONING BUILDING IN ACCORDANCE WITH INDUSTRY STANDARDS

5.) SCALE NOTE: DO NOT SCALE DRAWINGS.

6.) WHERE INDICATED, COMPLY WITH REQUIREMENTS AND RECOMMENDATIONS OF REFERENCED STANDARDS AND OTHER PUBLICATIONS, EXCEPT WHERE MORE DETAILED OR MORE STRINGENT PROVISIONS ARE REQUIRED BY CURRENT APPLICABLE CODES AND GOVERNING REGULATIONS.

7.) WHERE TWO OR MORE STANDARDS OR RECOMMENDATIONS OF TRADE ASSOCIATIONS APPLY TO SAME QUALITY CONTROL REQUIREMENTS FOR WORK, COMPLY WITH THE MOST STRINGENT. REFER UNCERTAIN INSTANCES TO THE OWNER'S REPRESENTATIVE.

8.) CONSTRUCTION WHICH IS NOT GOVERNED BY A LOCAL BUILDING CODE OR THE CONTRACT DOCUMENTS WILL BE GOVERNED BY THE MORE STRINGENT PROVISIONS OF THE LATEST PUBLISHED, STATUTE ADOPTED EDITION, OF THE FOLLOWING APPLICABLE CODES.

- IBC 2012 BUILDING CODE
- 2012 NATIONAL ELECTRICAL CODE
- 2009 UNIFORM PLUMBING CODE
- 2009 INTERNATIONAL MECHANICAL CODE
- 2009 INTERNATIONAL FIRE CODE
- AMERICANS WITH DISABILITIES ACT
- ACCESSIBILITY GUIDELINES FOR BUILDING FACILITIES
- 2009 INTERNATIONAL FUEL GAS CODE

PROJECT TEAM

ENGINEERING / PLANNING:
MORRISON MAIERLE
1 Engineering Place
Helena, Montana 59602
Phone: 406-442-3050

ARCHITECTURAL:
K+A designstudios
130 TRADING BAY DRIVE
SUITE 330
KENAI, ALASKA 99611
Phone: 907-283-3698
Fax.: 907-283-9083
E-mail: admin@ka-designstudios.com

MECHANICAL / ELECTRICAL:
T3 ALASKA
301 Calista Court. Suite 100
Anchorage, Alaska 99611
Phone: 907-865-7900

DESIGN DATA

LEGAL DESCRIPTION:

T 6N R 11W SEC 33 SEWARD MERIDIAN KN 2012089 BARON PARK 2012 ADDN TRACT 2

SYMBOLS

- 4 / A3.1 — EXTERIOR ELEVATION
- G / A3.2 — BUILDING SECTION
- A — INTERIOR ELEVATION
- 4 / A2.1 — DETAIL NO. SHEET
- 6 / A4.2 — SHEET
- 103 — DOOR NUMBER
- 15 — REVISION NOTE
- A1 — OPENING TYPE
- 12 — NOTE
- 104 — ROOM NUMBER
- — ELEVATION
- B — GRID
- W1 — WALL TYPE

MATERIALS

BLOCK WALL
CONCRETE
STONE
STEEL
EARTH
WOOD
PLYWOOD
RIGID INSULATION
GYPSUM BOARD
BATT INSULATION
SPRAYED INSULATION

DRAWING INDEX

T1.1 COVER SHEET

ARCHITECTURAL

A1.1 FINISH FLOOR PLAN
A1.2 EXISTING / DEMO ROOF PLAN
A1.3 RE-ROOF PLAN
A6.1 EXISTING DETAILS
A6.2 EXISTING DETAILS
A6.3 RE-ROOF DETAILS
A6.4 RE-ROOF DETAILS

MECHANICAL

M0.1 MECHANICAL SCHEDULES
M0.2 SCHEDULES AND SEQUENCE OF OPERATIONS
M0.3 MECHANICAL SEQUENCE OF OPERATIONS
M1.1 LOWER FLOOR PIPING PLAN
M1.2 UPPER FLOOR PIPING PLAN
M2.1 LOWER FLOOR VENTILATION PLAN
M2.2 UPPER FLOOR EXISTING VENTILATION PLAN
M3.1 MECHANICAL ROOF PLAN
M4.1 BOILER ROOM DEMOLITION PLAN
M4.2 BOILER ROOM REMODEL PLAN
M4.3 AIR HANDLING UNIT ROOM PLAN
M5.1 BOILER PIPING DIAGRAM
M5.2 MECHANICAL DIAGRAMS
M5.3 CHILLER PIPING DIAGRAM
M6.1 MECHANICAL DETAILS

MECHANICAL EXHIBIT DRAWINGS

M1 EQUIPMENT,. LEGEND PLUMBING FIXTURES
M2 UNDERFLOOR EQUIPMENT, CONT.
M3 1ST FLOOR PIPING
M4 1ST FLOOR PLAN DUCTWORK
M5 2ND FLOOR PIPING
M6 2ND FLOOR PLAN DUCTWORK

ELECTRICAL

E0.1 ABBREVIATIONS, SYMBOL LEGEND, & FIXTURE SCHEDULE
E1.1 ELECTRICAL SITE PLAN
E2.1 FIRST FLOOR LIGHTING PLAN
E2.2 SECOND FLOOR LIGHTING PLAN
E3.1 FIRST FLOOR POWER & SIGNAL PLAN
E3.2 SECOND FLOOR POWER & SIGNAL PLAN
E3.3 ROOFTOP POWER PLAN
E5.1 SINGLE LINE DIAGRAM & PANEL SCHEDULES

K+A designstudios
ARCHITECTURE + PLANNING
130 TRADING BAY RD. SUITE 330 KENAI, ALASKA 99611
T: 907.283.3698 WWW.KA-DESIGNSTUDIOS.COM

Morrison Maierle
engineers - surveyors - planners - scientists

ALASKA REGIONAL FIRE TRAINING CENTER BUILDING REHABILITATION
BID DOCUMENTS
KENAI, ALASKA

Revisions:

STATE OF ALASKA 49TH CHRISTOPHER M. PARKER A13230 REGISTERED PROFESSIONAL ARCHITECT

Date: JULY 31, 2019
Drawn: MCM
Checked: CMP
Project: 1119.DWG
File Name: 1119.DWG

Sheet Title: COVER SHEET

Sheet: T1.1

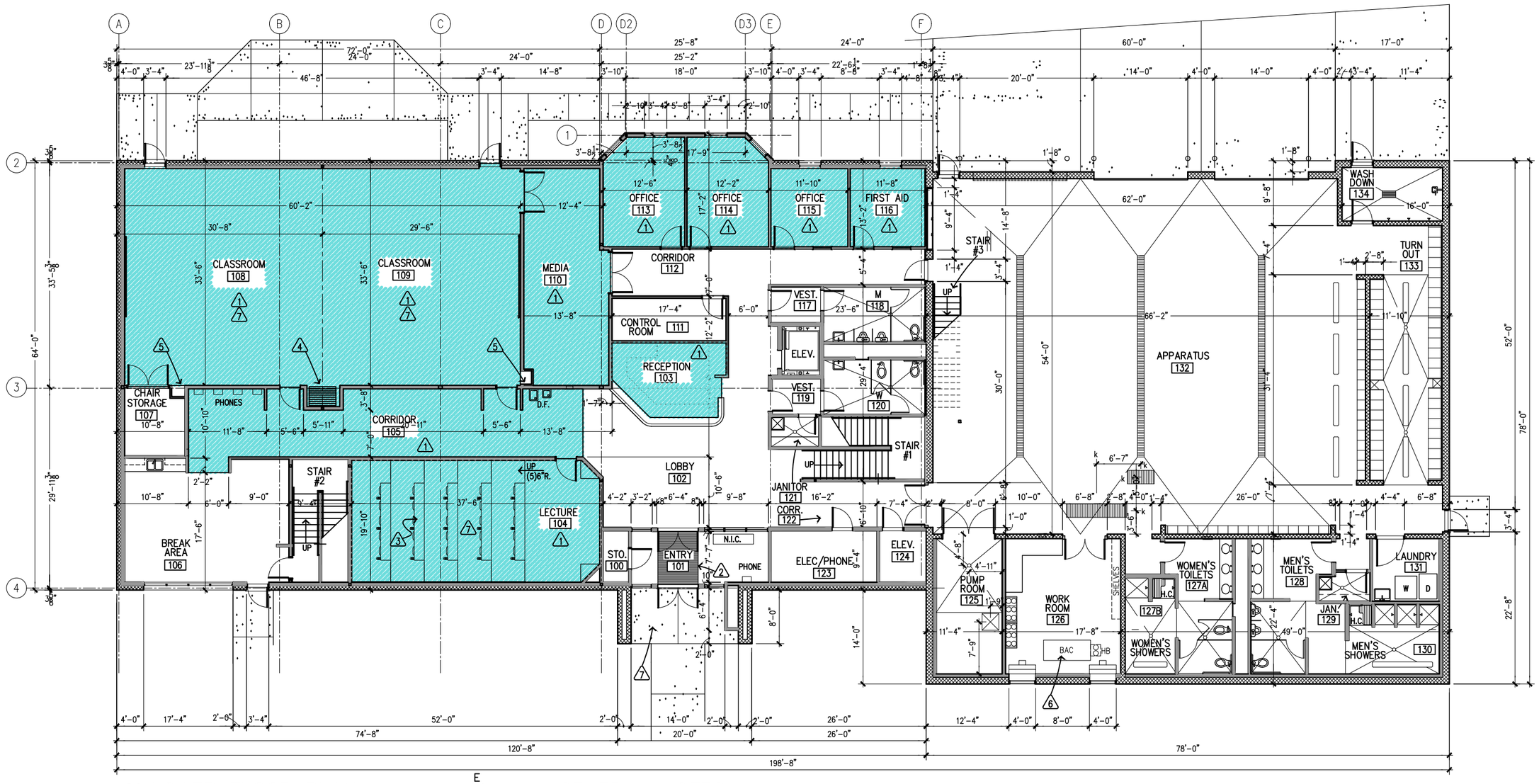

1 LOWER FLOOR PLAN
A2.1 SCALE: 1/8"=1'-0"

E N S W

NOTES THIS SHEET
01000-16

1. DEMO / REPLACE CARPET & RUBBER BASE IN ROOMS WITH HATCHED GRAPHIC. SEE SPEC FOR CARPET AND RUBBER BASE. REPAIR GWB AND PAINT AFTER REMOVING RUBBER BASE. PROVIDE NEW TRANSITION STRIPS THROUGHOUT.
2. EXISTING RECESSED FLOOR GRILL TO REMAIN
3. EXISTING PREFABRICATED DESKS, CONTRACTOR SHALL MOVE ALL FURNITURE WITHIN ROOM.
4. EXISTING STACKING PARTITION – PROVIDE CARPETING IN ALCOVE.
5. EXISTING VCR BOX TO REMAIN.
6. REMOVE AND REPLACE SCBA CYLINDER FILLING STATION PER SPEC 109250
7. PATCH, REPAIR AND PAINT GWB AT ALL ELECTRICAL LIGHTING WORK. SEE ELEC SHEETS. ALSO IN THE FOLLOWING ROOMS NOT SHOWN ON THIS SHEET: LIVING 222, SLEEP ROOMS 216, 223 AND 224.

GENERAL NOTES:

1. ALL DIMENSIONS ARE TAKEN FROM FACE OF CMU OR FACE OF FRAMING.

LEGEND:

- DEMO / REPLACE CARPET SEE SHEET NOTE 1
- FLOORING TO REMAIN

K+A designstudios
ARCHITECTURE + PLANNING
130 TRADING BAY RD. SUITE 330 KENAI, ALASKA 99611
T: 907.283.3698 WWW.KA-DESIGNSTUDIOS.COM

Morrison Maierle
engineers - surveyors - planners - scientists

ALASKA REGIONAL FIRE TRAINING CENTER BUILDING REHABILITATION
BID DOCUMENTS
KENAI, ALASKA

Revisions:

STATE OF ALASKA 49TH CHRISTOPHER M. PARKER A13236 REGISTERED PROFESSIONAL ARCHITECT

Date: JULY 31, 2019
Drawn: MCM
Checked: CMP
Project: 1119.DWG
File Name: 1119.DWG

Sheet Title: FINISH FLOOR PLAN

Sheet: A1.1

GENERAL NOTES

1. AFTER DEMOLITION OF THE EXISTING ROOFING, IF ANY DETERIORATED DECKING IS DISCOVERED, EITHER THE ARCHITECT OR PROJECT MANAGER SHALL BE CONTACTED TO VERIFY THE EXTENT OF DAMAGE PRIOR TO REPLACEMENT OR COVERING.
2. EXISTING EQUIPMENT CURBS AND PARAPET WALLS SHALL BE STRIPPED OF ALL ROOFING MATERIAL AND CLEANED OF ALL FASTENERS PRIOR TO RE-BUILDING.
3. FIELD VERIFY ALL EXISTING ROOF SLOPES, ELEVATIONS, SQUARE FOOTAGE'S, AND DIMENSIONS.
4. VERIFY USE, QUANTITY, TYPE, AND SIZE OF ROOF PENETRATIONS PRIOR TO EXTENDING OR REMOVAL. COORDINATE WITH THE OWNER ON PENETRATIONS THAT ARE ABANDONED.
4. AFTER DEMOLITION OF EXISTING ROOFING, NOTIFY ARCHITECT TO VERIFY SLOPE OF ORIGINAL ROOF CONSTRUCTION.
5. EXISTING VENTS, CONDUIT, ETC. TO BE CLEANED OF ALL EXISTING ASPHALTIC COATINGS PRIOR TO APPLYING NEW ROOF MEMBRANE PER MANUFACTURER'S RECOMMENDATIONS.
7. CONTRACTOR SHALL MAINTAIN THE BOTTOM ELEVATION OF THE EXISTING PARAPET COPING AT ALL EXTERIOR FACES OF WALLS AS REQ'D. SEE OTHER DETAILS FOR FURTHER INFORMATION.
8. CONTRACTOR SHALL REPAIR ALL INTERIOR FINISHES THAT ARE DAMAGED DUE TO ROOF DRAIN REMOVAL, LEADER REPAIR, OR OTHER ADJACENCIES AS REQUIRED TO ACCOMPLISH THE WORK.
9. CONTRACTOR SHALL REPAIR ALL DAMAGES TO LAWNS AND ANY OTHER DAMAGED SITE ELEMENTS DURING CONSTRUCTION.
10. ALL MECHANICAL CURBS TO RECEIVE TAPERED DRAINAGE CRICKETS ON UP-SLOPE SIDE WITH 1/4":12 SLOPE.

LEGEND:

- DOUBLE BALLAST PAVERS AT PERIMETER AND AROUND ROOF PENETRATIONS. (DEMO)
- SINGLE BALLAST PAVERS AT FIELD. (DEMO)

GENERAL NOTES:

1. MINIMUM 1/8" PER 12" SLOPE AT ALL CRICKETS. (EXISTING)

SHEET NOTES

1. MAST MOUNTED LIGHT EXISTING TO REMAIN
2. MAST MOUNTED WEATHER STATION EX. TO REMAIN
3. PARAPET MOUNTED TV CAMERA EX. TO REMAIN PROVIDE WATER TIGHT FLASHING
4. HIGH COMBUSTION AIR
5. LOW COMBUSTION AIR
6. LOUVERED PENTHOUSE PER MECH. TO REMAIN

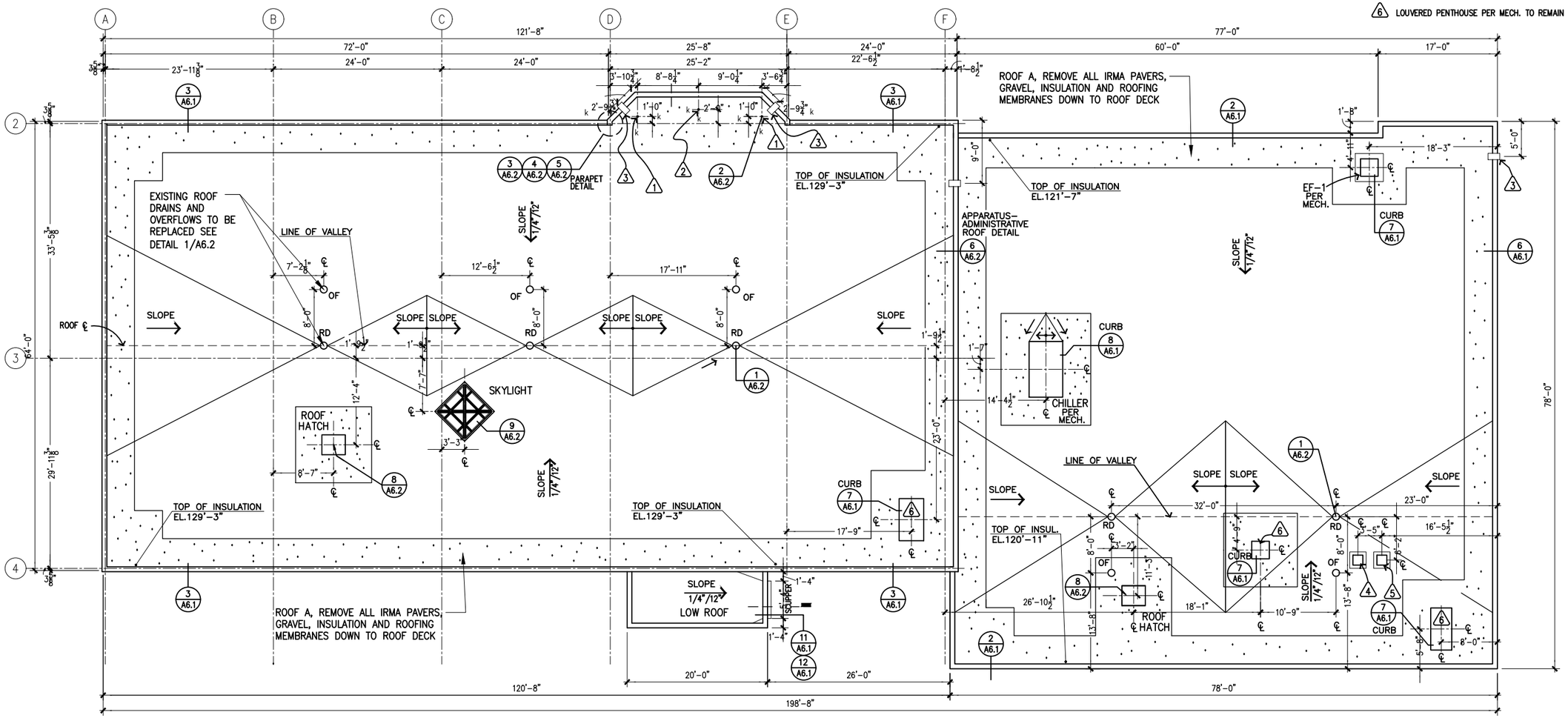

1 EXISTING CONDITIONS / DEMO ROOF PLAN

GRAPHIC SCALE: 1' 3' 6' 12'

REF. N E S W

K+A designstudios
ARCHITECTURE + PLANNING
130 TRADING BAY RD. SUITE 330 KENAI, ALASKA 99611
T: 907.283.3698 WWW.KA-DESIGNSTUDIOS.COM

Morrison Maierle
engineers - surveyors - planners - scientists

ALASKA REGIONAL FIRE TRAINING CENTER BUILDING REHABILITATION

BID DOCUMENTS
KENAI, ALASKA

Revisions:

STATE OF ALASKA 49TH CHRISTOPHER M. PARKER A13239 REGISTERED PROFESSIONAL ARCHITECT

Date: JULY 31, 2019
Drawn: MCM
Checked: CMP
Project: 1119.DWG
File Name: 1119.DWG

Sheet Title: EXISTING CONDITIONS / DEMO ROOF PLAN

Sheet: A1.2

GENERAL NOTES

1. AFTER DEMOLITION OF THE EXISTING ROOFING, IF ANY DETERIORATED DECKING IS DISCOVERED, EITHER THE ARCHITECT OR PROJECT MANAGER SHALL BE CONTACTED TO VERIFY THE EXTENT OF DAMAGE PRIOR TO REPLACEMENT OR COVERING.
2. EXISTING EQUIPMENT CURBS AND PARAPET WALLS SHALL BE STRIPPED OF ALL ROOFING MATERIAL AND CLEANED OF ALL FASTENERS PRIOR TO RE-BUILDING.
3. FIELD VERIFY ALL EXISTING ROOF SLOPES, ELEVATIONS, SQUARE FOOTAGE'S, AND DIMENSIONS.
4. VERIFY USE, QUANTITY, TYPE, AND SIZE OF ROOF PENETRATIONS PRIOR TO EXTENDING OR REMOVAL. COORDINATE WITH THE OWNER ON PENETRATIONS THAT ARE ABANDONED.
4. AFTER DEMOLITION OF EXISTING ROOFING, NOTIFY ARCHITECT TO VERIFY SLOPE OF ORIGINAL ROOF CONSTRUCTION.
5. EXISTING VENTS, CONDUIT, ETC. TO BE CLEANED OF ALL EXISTING ASPHALTIC COATINGS PRIOR TO APPLYING NEW ROOF MEMBRANE PER MANUFACTURER'S RECOMMENDATIONS.
7. CONTRACTOR SHALL MAINTAIN THE BOTTOM ELEVATION OF THE EXISTING PARAPET COPING AT ALL EXTERIOR FACES OF WALLS AS REQ'D. SEE OTHER DETAILS FOR FURTHER INFORMATION.
8. CONTRACTOR SHALL REPAIR ALL INTERIOR FINISHES THAT ARE DAMAGED DUE TO ROOF DRAIN REMOVAL, LEADER REPAIR, OR OTHER ADJACENCIES AS REQUIRED TO ACCOMPLISH THE WORK.
9. CONTRACTOR SHALL REPAIR ALL DAMAGES TO LAWNS AND ANY OTHER DAMAGED SITE ELEMENTS DURING CONSTRUCTION.
10. ALL MECHANICAL CURBS TO RECEIVE TAPERED DRAINAGE CRICKETS ON UP-SLOPE SIDE WITH 1/4":12 SLOPE.

LEGEND:

TAPERED INSULATION

NEW EPDM ROOF MEMBRANE

GENERAL NOTES:
1. MINIMUM 3/8" PER 12" SLOPE AT ALL CRICKETS.

SHEET NOTES

1. MAST MOUNTED LIGHT EXISTING TO REMAIN
2. MAST MOUNTED WEATHER STATION EX. TO REMAIN
3. PARAPET MOUNTED TV CAMERA EX. TO REMAIN PROVIDE WATER TIGHT FLASHING
4. HIGH COMBUSTION AIR
5. LOW COMBUSTION AIR
6. LOUVERED PENTHOUSE PER MECH. TO REMAIN

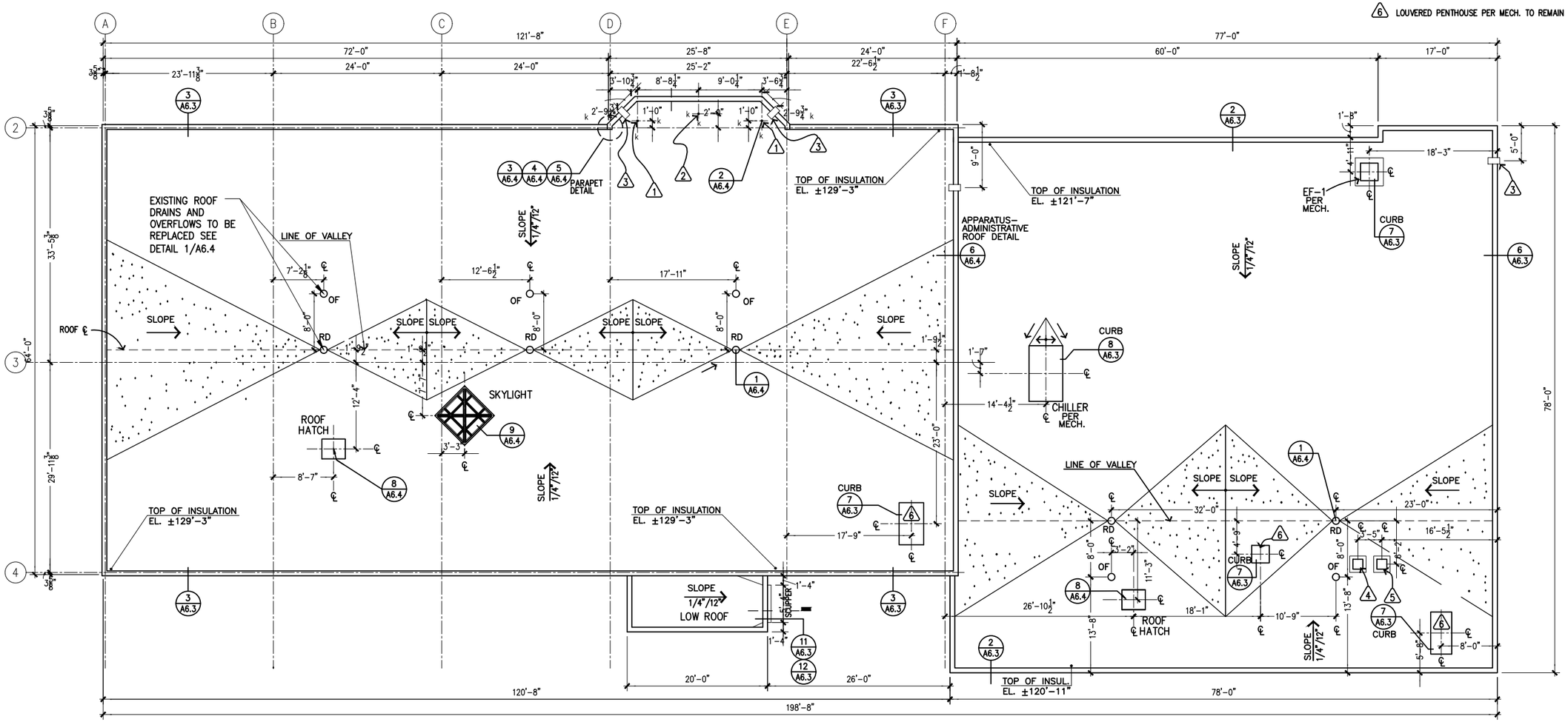

1 RE-ROOF PLAN

GRAPHIC SCALE: 3' 12' 1' 6'

REF. N E S W

K+A designstudios
ARCHITECTURE + PLANNING
130 TRADING BAY RD. SUITE 330 KENAI, ALASKA 99611
T: 907.283.3698 WWW.KA-DESIGNSTUDIOS.COM

Morrison Maierle
engineers - surveyors - planners - scientists

ALASKA REGIONAL FIRE TRAINING CENTER BUILDING REHABILITATION

BID DOCUMENTS
KENAI, ALASKA

Revisions:

STATE OF ALASKA 49TH CHRISTOPHER M. PARKER A13239 REGISTERED PROFESSIONAL ARCHITECT

Date: JULY 31, 2019
Drawn: MCM
Checked: CMP
Project: 1119.DWG
File Name: 1119.DWG

Sheet Title: RE-ROOF PLAN

Sheet: A1.3

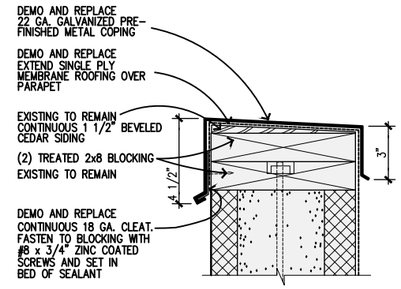

1 A6.1 EXISITNG PARAPET CAP
SCALE: 3"=1'-0"

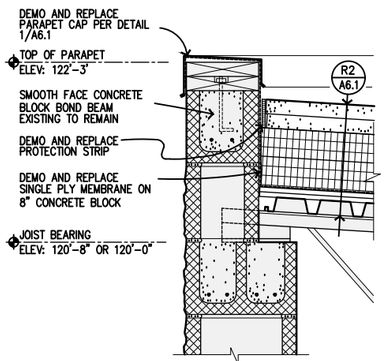

2 A6.1 EXISTING PARAPET DETAIL
SCALE: 1 1/2"=1'-0"

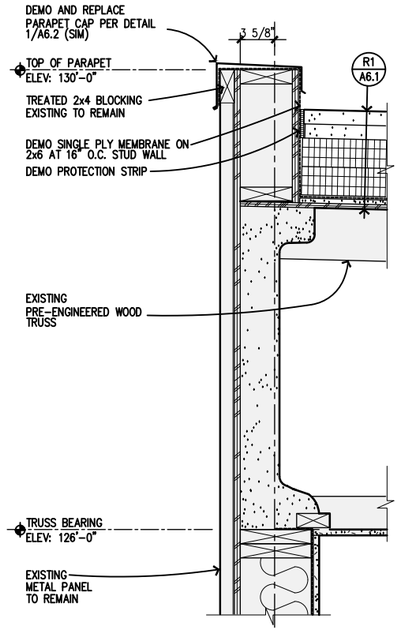

3 A6.1 EXISTING PARAPET DETAIL
SCALE: 1 1/2"=1'-0"

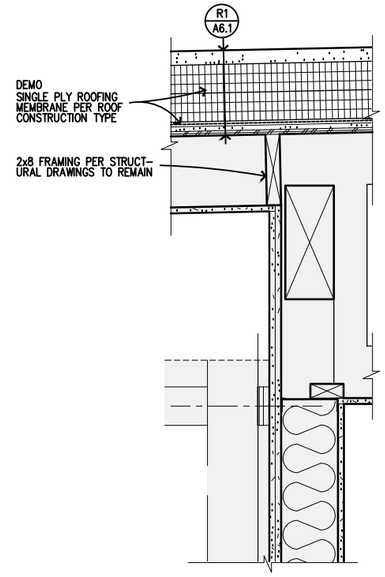

4 A6.1 EXISTING ELEVATOR SHAFT
SCALE: 1 1/2"=1'-0"

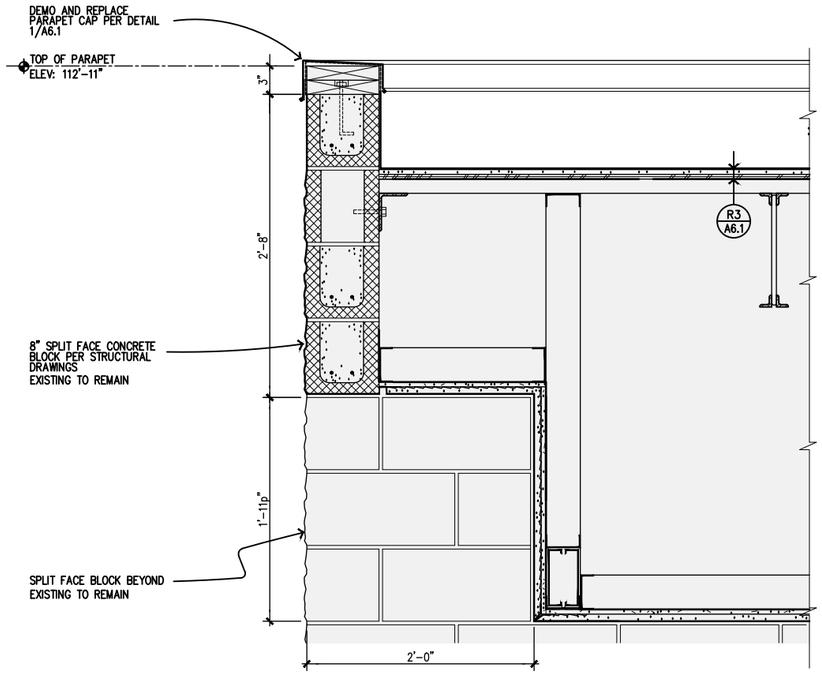

5 A6.1 EXISTING SECTION AT ENTRY
SCALE: 1 1/2"=1'-0"

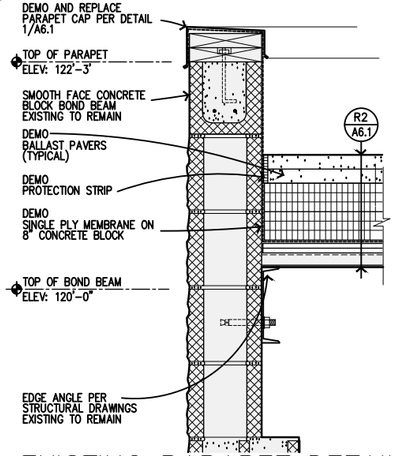

6 A6.1 EXISTING PARAPET DETAIL
SCALE: 1 1/2"=1'-0"

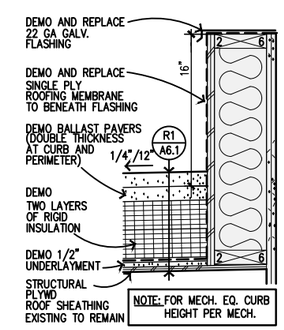

7 A6.1 EXISTING CURB DETAIL
SCALE: 1 1/2"=1'-0"

NOTE: COORDINATE ATTACHMENT TO CURB W/ROOFING MFR. TO ASSURE WATER-TIGHT INSTALLATION

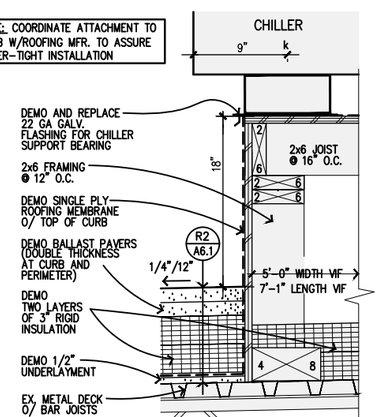

8 A6.1 EXISTING CHILLER CURB
SCALE: 1 1/2" =1'-0"

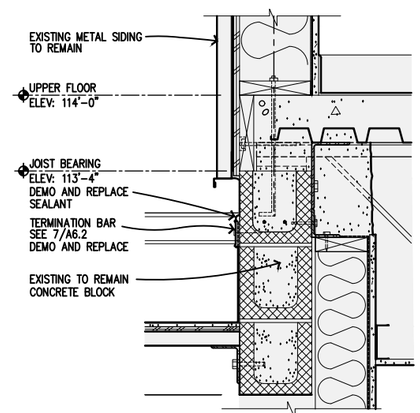

9 A6.1 EXISTING ROOF DETAIL
SCALE: 1 1/2"=1'-0"

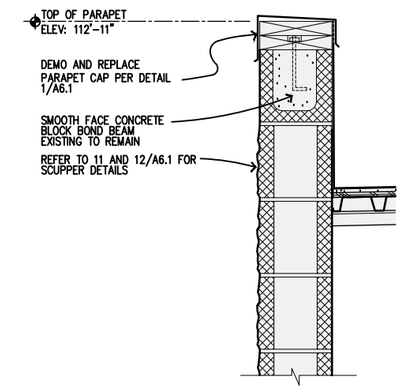

10 A6.1 EXISTING ROOF DETAIL
SCALE: 1 1/2"=1'-0"

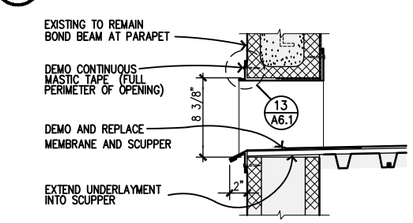

11 A6.1 EX. SCUPPER SECTION
SCALE: 1 1/2"=1'-0"

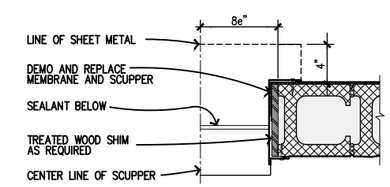

12 A6.1 EXISTING SCUPPER PLAN
SCALE: 1 1/2"=1'-0"

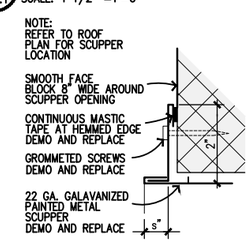

13 A6.1 EXISTING SCUPPER EDGE
SCALE: 6"=1'-0"

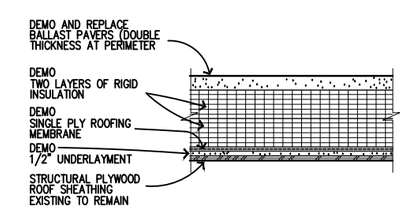

R1 A6.1 EXISTING ROOF TYPE
SCALE: 1 1/2"=1'-0"

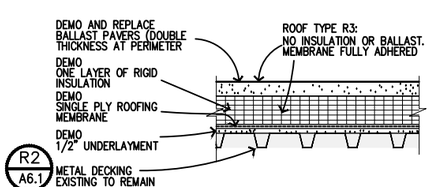

R3 A6.1 EXISTING ROOF TYPE
SCALE: 1 1/2"=1'-0"

K+A designstudios
ARCHITECTURE + PLANNING
130 TRADING BAY RD. SUITE 330 KENAI, ALASKA 99611
T: 907.283.3698 WWW.KA-DESIGNSTUDIOS.COM

Morrison Maierle
engineers - surveyors - planners - scientists

ALASKA REGIONAL FIRE TRAINING CENTER BUILDING REHABILITATION

BID DOCUMENTS
KENAI, ALASKA

Revisions:

STATE OF ALASKA 49TH CHRISTOPHER M. PARKER A13239 REGISTERED PROFESSIONAL ARCHITECT

Date: JULY 31, 2019
Drawn: MCM
Checked: CMP
Project: 1119.DWG
File Name: 1119.DWG

Sheet Title:
EXISTING DETAILS

ONE INCH BAR ON ORIGINAL DRAWING: SCALE ACCORDINGLY.
0 1"

Sheet:
A6.1

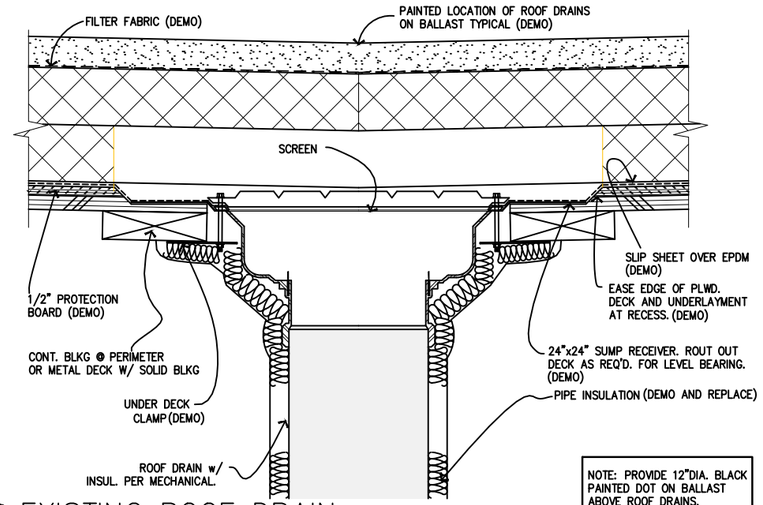

NOTE: PROVIDE 12"DIA. BLACK PAINTED DOT ON BALLAST ABOVE ROOF DRAINS.

1 A6.2 EXISTING ROOF DRAIN
SCALE: 3"=1'-0"

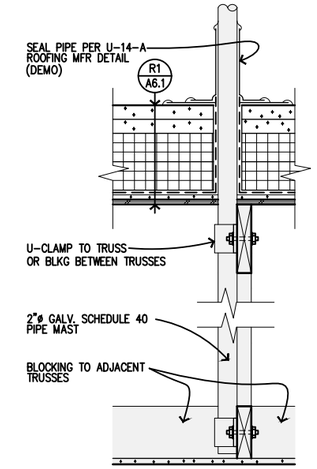

2 A6.2 EXISTING MAST DETAIL
SCALE: 1 1/2"=1'-0"

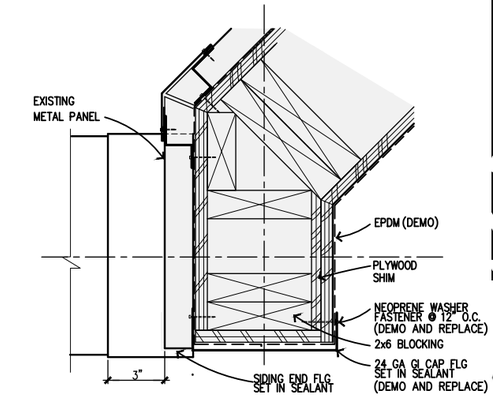

3 A6.2 EXISTING PLAN DETAIL
SCALE: 3" = 1'-0"

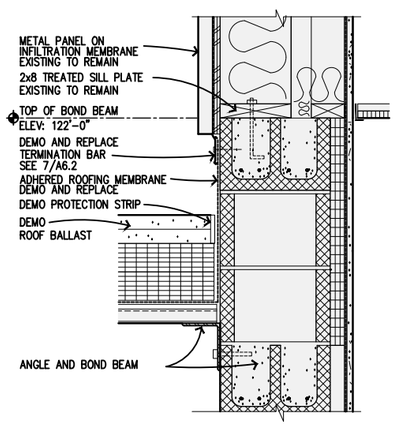

6 A6.2 EXISTING ROOF DETAIL
SCALE: 1 1/2"=1'-0"

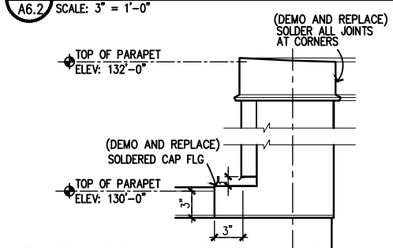

4 A6.2 EXISTING ELEVATION
SCALE: 1 1/2"=1'-0"

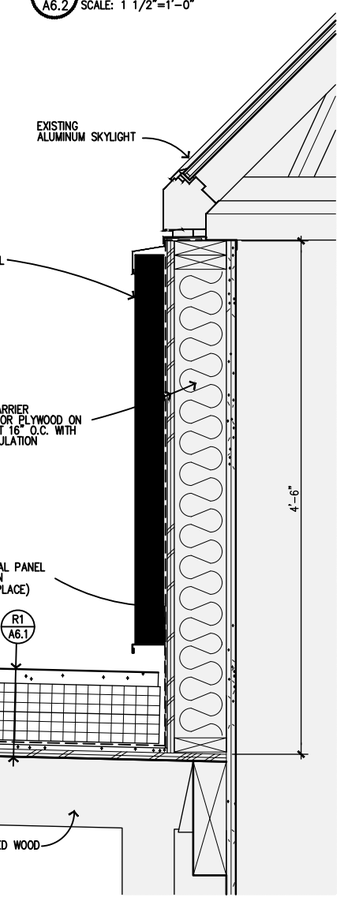

9 A6.2 EX. SECTION AT SKYLIGHT
SCALE: 1 1/2"=1'-0"

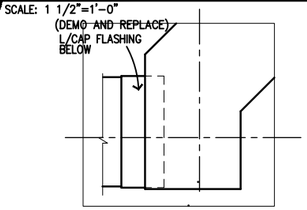

5 A6.2 EX. TOP VIEW
SCALE: 1 1/2"=1'-0"

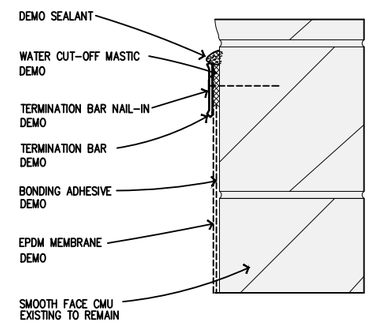

7 A6.2 EXISTING FLASHING DETAIL
SCALE: 3"=1'-0"

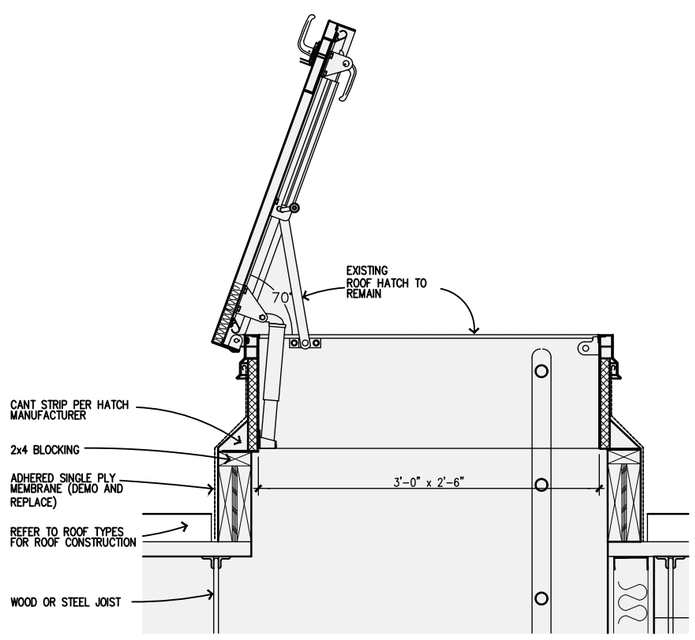

8 A6.2 EXISTING ROOF HATCH/ LADDER
SCALE: 1 1/2"=1'-0"

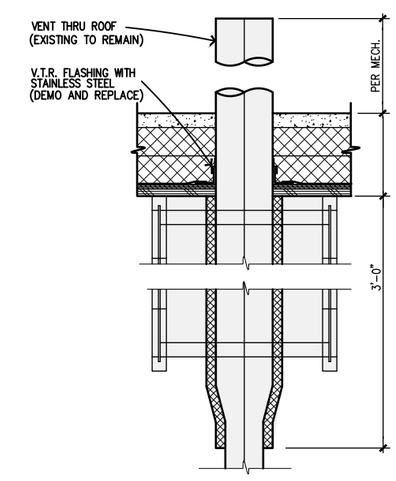

10 A6.2 EXISTING VENT THRU ROOF
SCALE: 3"=1'-0"

K+A designstudios
ARCHITECTURE + PLANNING
130 TRADING BAY RD. SUITE 330 KENAI, ALASKA 99611
T: 907.283.3698 WWW.KA-DESIGNSTUDIOS.COM

Morrison Maierle
engineers - surveyors - planners - scientists

ALASKA REGIONAL FIRE TRAINING CENTER BUILDING REHABILITATION

BID DOCUMENTS
KENAI, ALASKA

Revisions:

STATE OF ALASKA 49TH CHRISTOPHER M. PARKER A13239 REGISTERED PROFESSIONAL ARCHITECT

Date: JULY 31, 2019
Drawn: MCM
Checked: CMP
Project: 1119.DWG
File Name: 1119.DWG

Sheet Title:
EXISTING DETAILS

ONE INCH BAR ON ORIGINAL DRAWING: SCALE ACCORDINGLY.
0 1"

Sheet:
A6.2

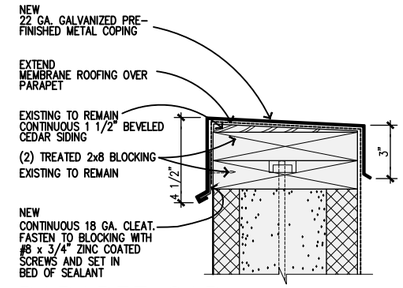

1 A6.3 PARAPET CAP
SCALE: 3"=1'-0"

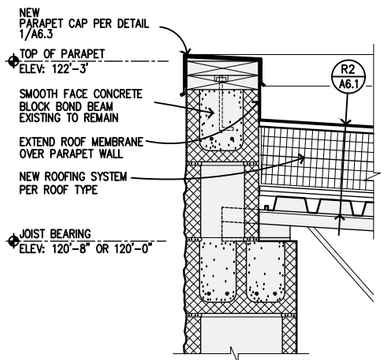

2 A6.3 PARAPET DETAIL
SCALE: 1 1/2"=1'-0"

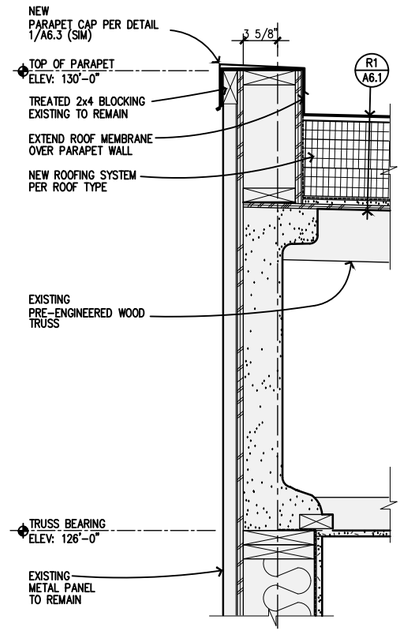

3 A6.3 PARAPET DETAIL
SCALE: 1 1/2"=1'-0"

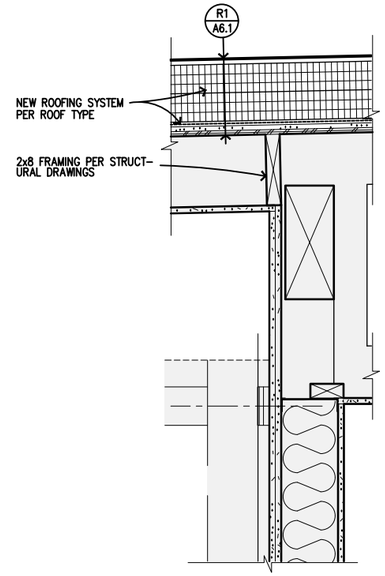

4 A6.3 ELEVATOR SHAFT
SCALE: 1 1/2"=1'-0"

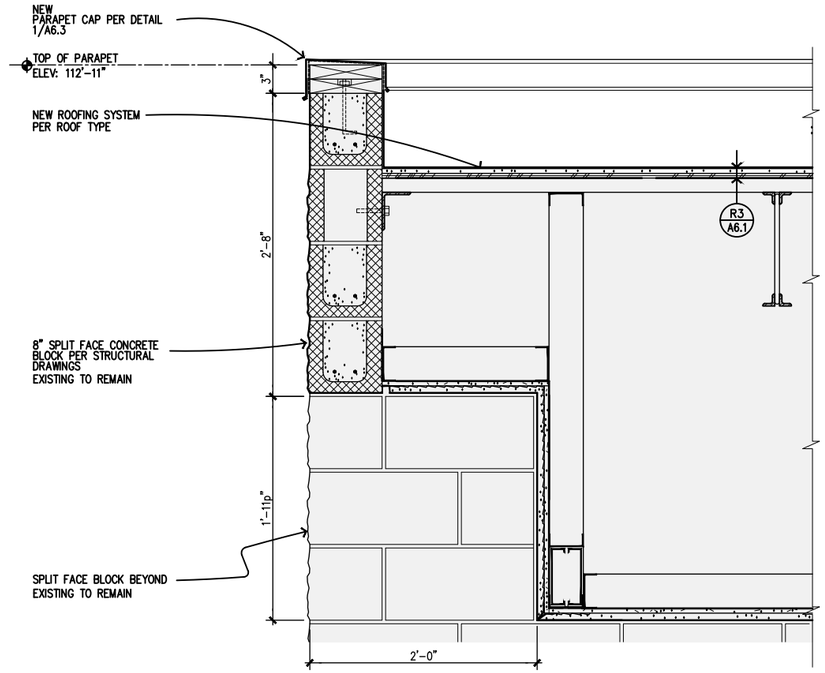

5 A6.3 SECTION AT ENTRY
SCALE: 1 1/2"=1'-0"

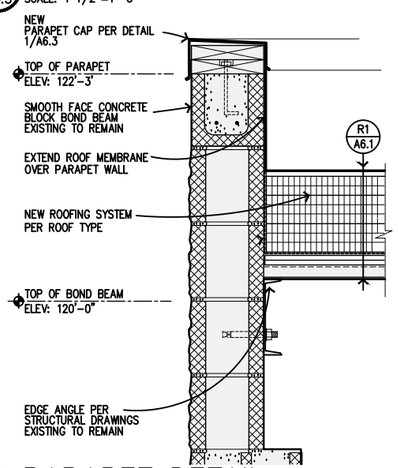

6 A6.3 PARAPET DETAIL
SCALE: 1 1/2"=1'-0"

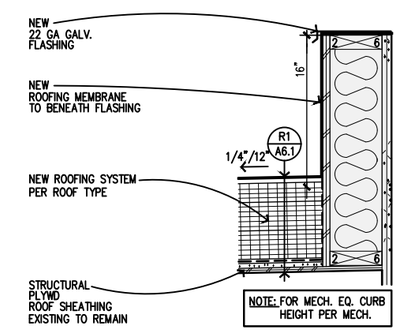

7 A6.3 CURB DETAIL
SCALE: 1 1/2"=1'-0"

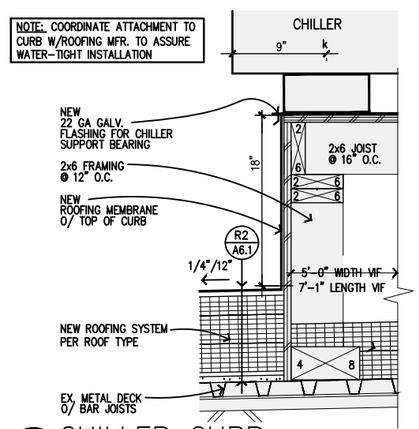

8 A6.3 CHILLER CURB
SCALE: 1 1/2" =1'-0"

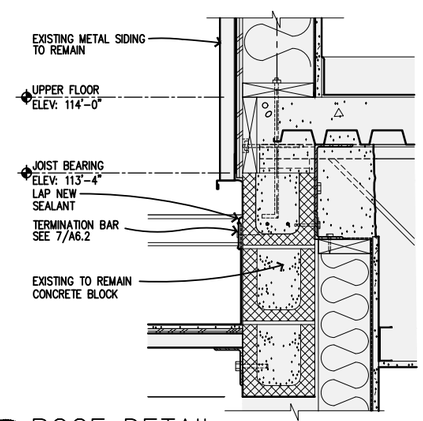

9 A6.3 ROOF DETAIL
SCALE: 1 1/2"=1'-0"

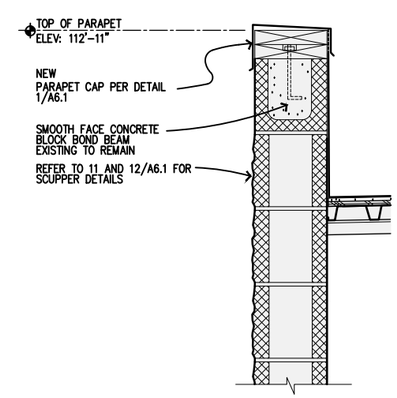

10 A6.3 ROOF DETAIL
SCALE: 1 1/2"=1'-0"

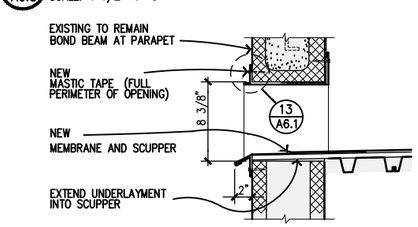

11 A6.3 SCUPPER SECTION
SCALE: 1 1/2"=1'-0"

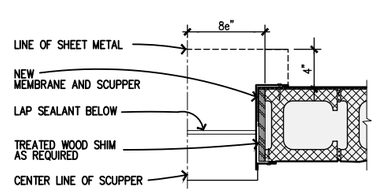

12 A6.3 SCUPPER PLAN
SCALE: 1 1/2"=1'-0"

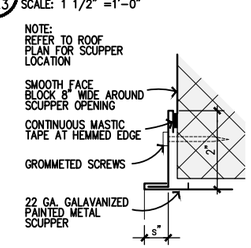

13 A6.3 SCUPPER EDGE
SCALE: 6"=1'-0"

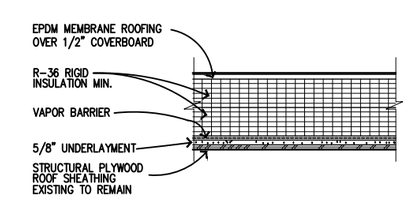

R1 A6.3 ROOF TYPE
SCALE: 1 1/2"=1'-0"

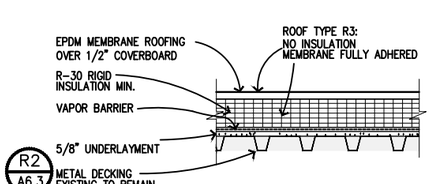

R2 A6.3 ROOF TYPE
SCALE: 1 1/2"=1'-0"

R3 A6.3 ROOF TYPE
SCALE: 1 1/2"=1'-0"

K+A designstudios
ARCHITECTURE + PLANNING
130 TRADING BAY RD. SUITE 330 KENAI, ALASKA 99611
T: 907.283.3698 WWW.KA-DESIGNSTUDIOS.COM

Morrison Maierle
engineers - surveyors - planners - scientists

ALASKA REGIONAL FIRE TRAINING CENTER BUILDING REHABILITATION

BID DOCUMENTS
KENAI, ALASKA

Revisions:

STATE OF ALASKA
49TH
CHRISTOPHER M. PARKER
A13230
REGISTERED PROFESSIONAL ARCHITECT

Date: JULY 31, 2019
Drawn: MCM
Checked: CMP
Project: 1119.DWG
File Name: 1119.DWG

Sheet Title:
NEW DETAILS

Sheet:
A6.3

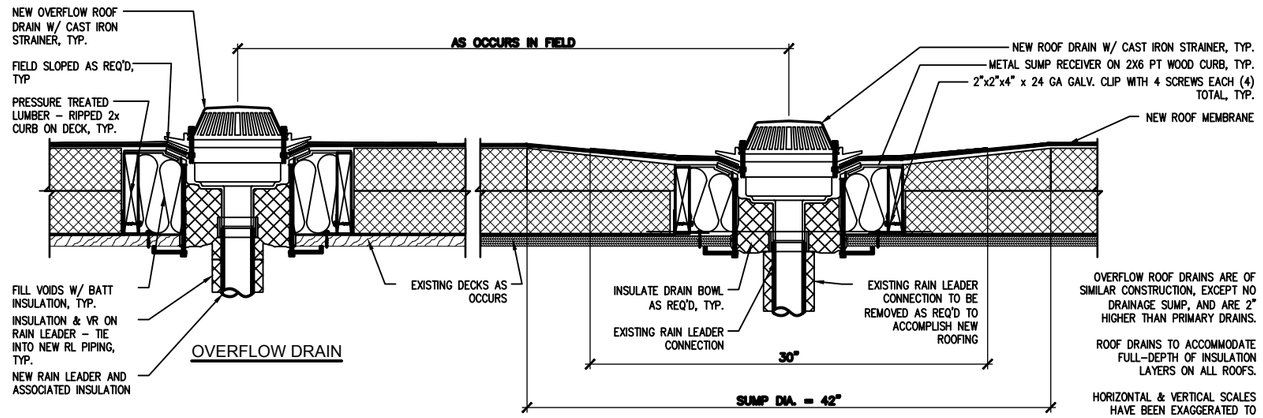

OVERFLOW ROOF DRAINS ARE OF SIMILAR CONSTRUCTION, EXCEPT NO DRAINAGE SUMP, AND ARE 2" HIGHER THAN PRIMARY DRAINS.

ROOF DRAINS TO ACCOMMODATE FULL-DEPTH OF INSULATION LAYERS ON ALL ROOFS.

HORIZONTAL & VERTICAL SCALES HAVE BEEN EXAGGERATED TO OVERFLOW DRAINS.

1 A6.4 ROOF DRAIN
SCALE: 3"=1'-0"

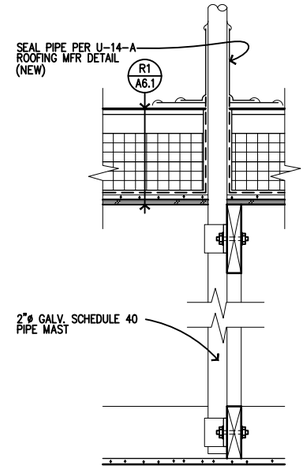

2 A6.4 MAST DETAIL
SCALE: 1 1/2"=1'-0"

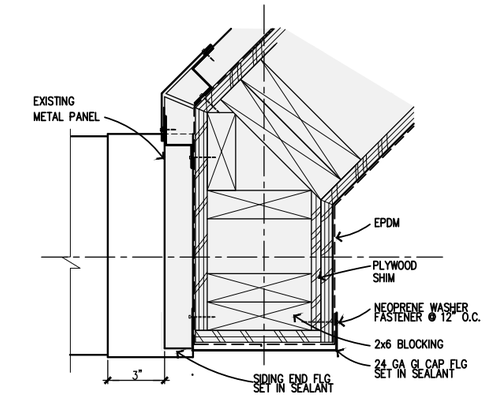

3 A6.4 PLAN DETAIL
SCALE: 3" = 1'-0"

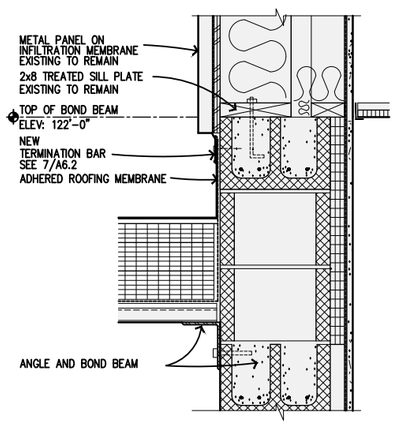

6 A6.4 ROOF DETAIL
SCALE: 1 1/2"=1'-0"

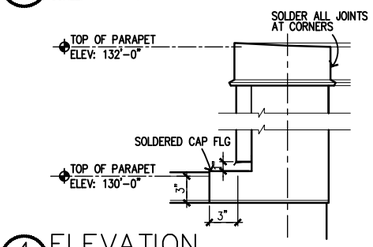

4 A6.4 ELEVATION
SCALE: 1 1/2"=1'-0"

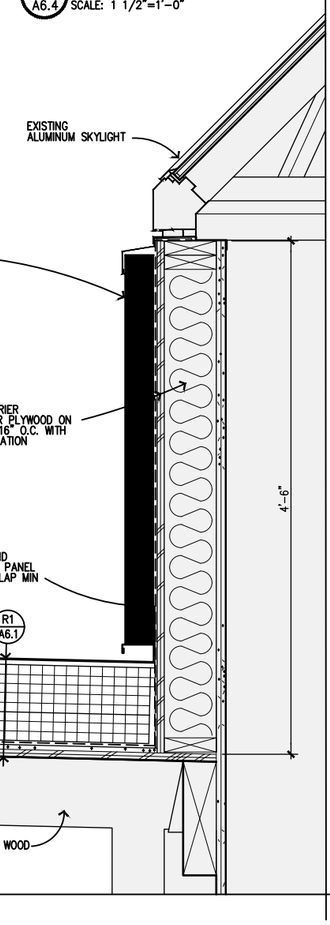

9 A6.4 SECTION AT SKYLIGHT
SCALE: 1 1/2"=1'-0"

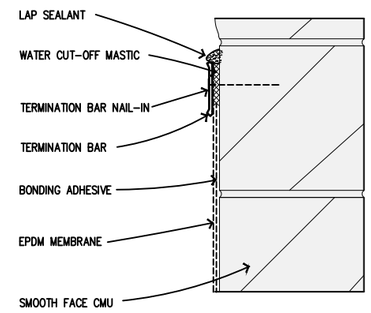

NOTES:
1.) APPLY ON SMOOTH HARD SURFACE ONLY. NOT FOR USE ON WOOD
2.) APPLY ON SMOOTH CMU ONLY
3.) WATER CUT-OFF MASTIC MUST BE HELD UNDER CONSTANT PRESSURE.
4.) DO NOT WRAP COMPRESSION TERMINATION AROUND CORNERS
5.) ALLOW 1/4" MIN. TO 1/2" MAX. SPACING BETWEEN CONSECUTIVE LENGTHS OF TERMINATION BAR
6.) TERMINATION BAR MUST BE 1/8"x1" MINIMUM.

7 A6.4 FLASHING DETAIL
SCALE: 3"=1'-0"

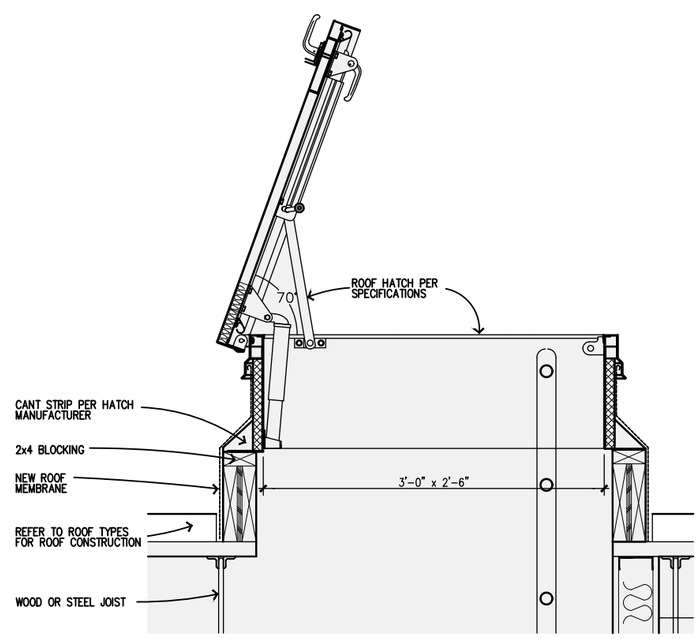

8 A6.4 ROOF HATCH/ LADDER
SCALE: 1 1/2"=1'-0"

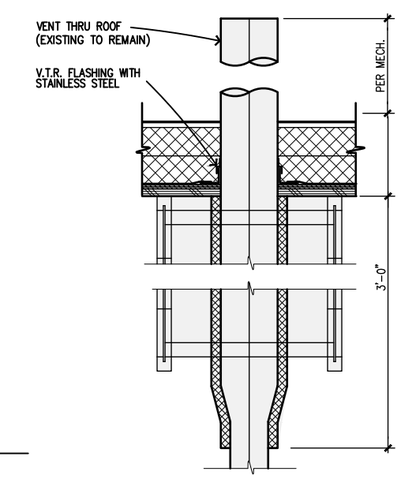

5 A6.4 TOP VIEW
SCALE: 1 1/2"=1'-0"

10 A6.4 VENT THRU ROOF
SCALE: 3"=1'-0"

K+A designstudios
ARCHITECTURE + PLANNING
130 TRADING BAY RD. SUITE 330 KENAI, ALASKA 99611
T: 907.283.3698 WWW.KA-DESIGNSTUDIOS.COM

Morrison Maierle
engineers - surveyors - planners - scientists

ALASKA REGIONAL FIRE TRAINING CENTER BUILDING REHABILITATION

BID DOCUMENTS
KENAI, ALASKA

Revisions:

STATE OF ALASKA 49TH CHRISTOPHER M. PARKER A13239 REGISTERED PROFESSIONAL ARCHITECT

Date: JULY 31, 2019
Drawn: MCM
Checked: CMP
Project: 1119.DWG
File Name: 1119.DWG

Sheet Title: NEW DETAILS

Sheet: A6.4

MECHANICAL LEGEND

- DENOTES DEMOLITION
- COLD WATER PIPING
- HOT WATER PIPING
- HOT WATER RECIRCULATED PIPING
- WASTE PIPING
- VENT PIPING
- XXX — PIPING, SEE ABBREVIATIONS FOR MEDIA
- DIRECTION OF FLOW
- PIPE ANCHOR
- PIPE GUIDE
- PIPE UP
- PIPE DOWN
- TEE UP
- TEE DOWN
- CAP
- UNION
- CLEANOUT
- HOSE BIBB
- ISOLATION VALVE
- TAMPER-PROOF GAS PLUG VALVE
- BALANCE VALVE
- AUTOMATIC FLOW LIMITING VALVE
- CHECK VALVE
- STRAINER WITH BLOWDOWN
- FLEXIBLE PIPING CONNECTOR
- 2-WAY CONTROL VALVE
- 3-WAY CONTROL VALVE
- PRESSURE REDUCING VALVE
- PRESSURE/TEMPERATURE RELIEF VALVE
- THERMOMETER
- PRESSURE GAUGE WITH ISOLATION COCK
- WATER HAMMER ARRESTOR
- X — LETTER INDICATES PDI SIZE
- PUMP
- FLOOR OR YARD CLEANOUT
- FLOOR DRAIN
- SUPPLY AIR DUCT UP & DOWN (SQUARE)
- RETURN AIR DUCT UP & DOWN (SQUARE)
- EXHAUST AIR DUCT UP & DOWN (SQUARE)
- DUCT UP & DOWN (ROUND)
- 28/14 — RECTANGULAR DUCT SIZE (FIRST NUMBER - SIDE SHOWN) (SECOND NUMBER - SIDE NOT SHOWN)
- SOUND LINED DUCTWORK
- INSULATED DUCTWORK
- TURNING VANES
- VOLUME DAMPER
- MOTORIZED CONTROL DAMPER
- FD — FIRE DAMPER
- FSD — FIRE SMOKE DAMPER
- FLEXIBLE DUCT TO DIFFUSER (DIFFUSER SYMBOL MAY VARY)
- T — THERMOSTAT OR SENSOR
- Tr — REVERSE ACTING THERMOSTAT OR SENSOR
- T — THERMOSTAT OR SENSOR WITH LOCKING COVER
- SP — STATIC PRESSURE SENSOR
- POINT OF CONNECTION TO EXISTING
- X — KEY NOTE
- X / MX — DETAIL NUMBER / SHEET LOCATED ON

PLUMBING FIXTURE SCHEDULE

TAG	FIXTURE	MINIMUM CONNECTION SIZE					MANUFACTURER	MODEL	COLOR	TRIM / REMARKS
		CW	HW	TRAP	VENT	WASTE				
RD-1	ROOF DRAIN	---	---	---	---	3"	J.R. SMITH	1010	---	CAST IRON DOME STRAINER, UNDERDECK CLAMP, ROOF SUMP RECEIVER, EXTENSION WITH SECONDARY CLAMPING DEVICE AS REQUIRED
OD-1	OVERFLOW DRAIN	---	---	---	---	3"	J.R. SMITH	1080	---	2" DAM, CAST IRON DOME STRAINER, UNDERDECK CLAMP, ROOF SUMP RECEIVER, EXTENSION WITH SECONDARY CLAMPING DEVICE AS REQUIRED

EXPANSION TANK SCHEDULE

TAG	MFGR / MODEL	FUNCTION	FLUID	TOTAL VOLUME (GALLONS)	ACCEPTANCE VOLUME (GALLONS)	DIMENSIONS	MATERIAL	LABEL	REMARKS
ET-1	AMTROL / AX-100V	HEATING WATER SYSTEM EXPANSION	WATER	55.7	22.6	16.25"Ø x 69"	STEEL/BUTYL	ASME	PRECHARGE TO 15 PSIG
ET-2	AMTROL / AX-40V	HEAT GLYCOL SYSTEM EXPANSION	50% P.G.	21.7	11.3	16.25"Ø x 29.5"	STEEL/BUTYL	ASME	PRECHARGE TO 15 PSIG
ET-3	AMTROL / AX-20V	COOLING GLYCOL SYSTEM EXPANSION	40% P.G.	10.9	2.5	12"Ø x 26"	STEEL/BUTYL	ASME	PRECHARGE TO 15 PSIG

GLYCOL MAKE-UP TANK SCHEDULE

TAG	MFGR / MODEL	FUNCTION	FLUID	STORAGE (GALLONS)	DIMENSIONS	MATERIAL	ELECTRICAL DATA		LABEL	REMARKS
							AMPS/WATTS	VOLTS/PH		
GT-1	AXIOM / SF100	HEATING SYSTEM GLYCOL MAKE UP	50% P.G.	55.0	24"Ø x 49"H	PLASTIC	0.7 AMPS	120/1	ETL	WITH PACKAGED PUMP, CONTROLS, LOW LEVEL ALARM AND REMOTE MONITORING CONTACTS
GT-2	AXIOM / SF100	COOLING SYSTEM GLYCOL MAKE UP	40% P.G.	55.0	24"Ø x 49"H	PLASTIC	0.7 AMPS	120/1	ETL	WITH PACKAGED PUMP, CONTROLS, LOW LEVEL ALARM AND REMOTE MONITORING CONTACTS

BOILER SCHEDULE

TAG	MFGR / MODEL	TYPE	FLUID	FUEL	BURNER INPUT (MBH)	OUTPUT (MBH)	ELECTRICAL DATA		LABEL	REMARKS
							AMPS/WATTS	VOLTS/PH		
B-1	AERCO / BMK-1500 PLATINUM-EDGE	CONDENSING	WATER	NATURAL GAS AND PROPANE	1,500	1,305	16 AMPS	120/1	ASME	DUAL FUEL, TRIM PER INTERNATIONAL MECHANICAL CODE CHAPTER 10
B-2	AERCO / BMK-1500 PLATINUM-EDGE	CONDENSING	WATER	NATURAL GAS AND PROPANE	1,500	1,305	16 AMPS	120/1	ASME	DUAL FUEL, TRIM PER INTERNATIONAL MECHANICAL CODE CHAPTER 10

HEAT EXCHANGER SCHEDULE

TAG	MFGR / MODEL	TYPE	FLOW ARRANGEMENT	HOT SIDE						HEAT EXCHANGED (MBH)	COLD SIDE						LABEL	REMARKS
				FLUID	FLOW RATE (GPM)	FPD (FT HD)	EFT	APPROX LFT	CONN SIZE		FLUID	FLOW RATE (GPM)	FPD (FT HD)	APPROX EFT	LFT	CONN SIZE		
HE-1	KELVION / FP10X20L-36	BRAZED PLATE	COUNTER-FLOW	WATER	54.5	<4.5'	180°F	150°F	2"	800	40% P.G.	80	<10.2'	98.4°F	120°F	2"	UL	WITH SUPPORT STAND

PUMP SCHEDULE

TAG	MFGR / MODEL	SERVICE	FLUID	FLOW RATE (GPM)	HEAD (FEET)	MOTOR DATA			REMARKS
						RPM	HP	VOLTS/PH	
BC-1	TACO / VR20-3	BOILER CIRCULATION	WATER	80	14'	---	1	120/1	EC MOTOR
BC-2	TACO / VR20-3	BOILER CIRCULATION	WATER	80	14'	---	1	120/1	EC MOTOR
CP-1A	TACO / 1641	BUILDING HEAT	WATER	140	40'	1,750	3	460/3	WITH VFD
CP-1B	TACO / 1641	BUILDING HEAT	WATER	140	40'	1,750	3	460/3	WITH VFD, STANDBY PUMP TO CP-1A
CP-2	TACO / 1935	HEAT EXCHANGER CIRCULATION	WATER	55	21'	1,750	3/4	460/3	---
CP-3	TACO / 1911	GLYCOL HEATING SYSTEM CIRCULATION	50% P.G.	80	44'	1,750	2	460/3	---
CP-4	EXISTING	DOMESTIC HOT WATER TANK CIRCULATION	WATER	25	44'	---	1/6	120/1	EXISTING PUMP
CP-5	EXISTING	DOMESTIC HOT WATER RECIRCULATION	WATER	5	5'	---	1/33	120/1	EXISTING PUMP
CP-6	EXISTING	APPARATUS BAY RADIANT ZONE	50% P.G.	16	13'	---	1/12	120/1	EXISTING PUMP
CP-7	EXISTING	SIDEWALK SNOWMELT	50% P.G.	6	12'	---	1/12	120/1	EXISTING PUMP
CP-8	EXISTING	SIDEWALK SNOWMELT	50% P.G.	4	12'	---	1/12	120/1	EXISTING PUMP
CP-9	EXISTING	APPARATUS BAY APRON SNOWMELT	50% P.G.	51	23'	---	3/4	480/3	EXISTING PUMP
CP-10	EXISTING	ROOM 207 RADIANT ZONE	50% P.G.	3	7'	---	1/25	120/1	EXISTING PUMP
CP-11	TACO / 1911	COOLING GLYCOL CIRCULATION	40% P.G.	90.5	45'	3,500	3	460/3	---

AIR SEPARATOR SCHEDULE

TAG	MFGR / MODEL	SYSTEM	FLUID	FLOW RATE (GPM)	WPD (FT HD)	INLET/OUTLET SIZE	DIMENSIONS	LABEL	REMARKS
AS-1	SPIROTHERM / VDT-400	HEATING SYSTEM	50% P.G.	195	<1.0'	4"	31.4"H x 8.6"Ø	ASME	COMBINATION AIR AND DIRT SEPARATOR WITH AUTO AIR VENT
AS-2	SPIROTHERM / VDT-250	HEATING SYSTEM	50% P.G.	80	<1.0'	2-1/2"	25.3"H x 6.3"Ø	ASME	COMBINATION AIR AND DIRT SEPARATOR WITH AUTO AIR VENT
AS-3	SPIROTHERM / VDT-250	HEATING SYSTEM	40% P.G.	90.5	<1.0'	2-1/2"	25.3"H x 6.3"Ø	ASME	COMBINATION AIR AND DIRT SEPARATOR WITH AUTO AIR VENT

K+A designstudios
ARCHITECTURE + PLANNING
130 TRADING BAY RD SUITE 330 KENAI, ALASKA 99611
T: 907.283.0880 WWW.KA-DESIGNSTUDIOS.COM

T3 ALASKA LLC
Mechanical & Electrical Engineering
301 Calista Court, Suite 100
Anchorage, Alaska 99518
Ph: 907-865-7900 AELC L 1625

Morrison Maierle
engineers · surveyors · planners · scientists

ALASKA REGIONAL FIRE TRAINING CENTER BUILDING REHABILITAION

BID DOCUMENTS
KENAI, ALASKA

Revisions:

STATE OF ALASKA 49TH
ALEC C. THOMSON
ME-8694
07/31/19
REGISTERED PROFESSIONAL ENGINEER

Date: JULY 31, 2019
Drawn: STH
Checked: ACT
Project: 2019.053.0
File Name: 19053–M01

Sheet Title:
MECHANICAL SCHEDULES

Sheet:
M0.1

1 of 15M

© Copyright T3 Alaska, LLC

ABBREVIATIONS

ADA	AMERICANS WITH DISABILITIES ACT
AFF	ABOVE FINISHED FLOOR
AFT	AVERAGE FLUID TEMPERATURE
AL	ALUMINUM
AMB	AMBIENT
AMPS	AMPERES
APD	AIR PRESSURE DROP
ASME	AMERICAN SOCIETY OF MECHANICAL ENGINEERS
BDD	BACKDRAFT DAMPER
BLDG	BUILDING
BTUH	BRITISH THERMAL UNIT PER HOUR
C/A	COMBUSTION AIR
CFM	CUBIC FEET PER MINUTE
CGR	COOLING GLYCOL RETURN
CGS	COOLING GLYCOL SUPPLY
Cu	COPPER
CW	COLD WATER
Ø	DIAMETER
DIA	DIAMETER
DB	DRY BULB
dB	DECIBELS
DEG	DEGREE
(E)	EXISTING
E/A	EXHAUST AIR
EA	EACH
EAT	ENTERING AIR TEMPERATURE
EDB	ENTERING DRY BULB TEMPERATURE
EFT	ENTERING FLUID TEMPERATURE
ESP	EXTERNAL STATIC PRESSURE
EWB	ENTERING WET BULB TEMPERATURE
EWT	ENTERING WATER TEMPERATURE
EXH	EXHAUST
°F	DEGREES FAHRENHEIT
FCO	FLOOR CLEAN OUT
FD	FIRE DAMPER
FLA	FULL LOAD AMPERES
FPF	FINS PER FOOT
FPM	FEET PER MINUTE
FSD	FIRE SMOKE DAMPER
FT	FEET
G	NATURAL GAS
GA	GAUGE
GPH	GALLONS PER HOUR
GPM	GALLONS PER MINUTE
GR	HEATING GLYCOL RETURN
GS	HEATING GLYCOL SUPPLY
H	HEIGHT
HD	HEAD
HGR	HEATING GLYCOL RETURN
HGS	HEATING GLYCOL SUPPLY
HR	HOUR
HW	HOT WATER
HWC	HOT WATER CIRCULATED
HP	HORSEPOWER
HWR	HEATING WATER RETURN
HWS	HEATING WATER SUPPLY
ID	INSIDE DIAMETER
IE	INVERT ELEVATION
IN	INCH
IMC	INTERNATIONAL MECHANICAL CODE
LAT	LEAVING AIR TEMPERATURE
LBS	POUNDS
LAT	LEAVING AIR TEMPERATURE
LDB	LEAVING DRY BULB TEMPERATURE
LF	LINEAL FEET
LFT	LEAVING FLUID TEMPERATURE
LWT	LEAVING WATER TEMPERATURE
MAX	MAXIMUM
MBH	THOUSAND BTU PER HOUR
MCA	MINIMUM CIRCUIT AMPACITY
MFGR	MANUFACTURER
MFS	MAXIMUM FUSE SIZE
MIN	MINIMUM
MOP	MAXIMUM OVERCURRENT PROTECTION
MPG	MEDIUM PRESSURE GAS
NC	NOISE CRITERIA
N.C.	NORMALLY CLOSED
N.O.	NORMALLY OPEN
O/A	OUTSIDE AIR
OPD	OVERCURRENT PROTECTION DEVICE
OSD	OVERFLOW STORM DRAIN
PD	PRESSURE DROP
P.G.	PROPYLENE GLYCOL
PH	PHASE
PSI	POUNDS PER SQUARE INCH
PSIA	POUNDS PER SQUARE INCH ABSOLUTE
PSIG	POUNDS PER SQUARE INCH GAUGE
P	PROPANE
R/A	RETURN AIR
RH	RELATIVE HUMIDITY
RPM	REVOLUTIONS PER MINUTE
S/A	SUPPLY AIR
SD	STORM DRAIN
SP	STATIC PRESSURE
SS	STAINLESS STEEL
SQ	SQUARE
T/A	TRANSFER AIR
TSP	TOTAL STATIC PRESSURE
TSTAT	THERMOSTAT
TYP	TYPICAL
UPC	UNIFORM PLUMBING CODE
V	VENT
VFD	VARIABLE FREQUENCY DRIVE
VTR	VENT THROUGH ROOF
WC	WATER COLUMN
WG	WATER GAGE
WCO	WALL CLEAN OUT
W	WASTE
WB	WET BULB
WPD	WATER PRESSURE DROP
YCO	YARD CLEAN OUT

WATER CHILLER SCHEDULE

TAG	MFGR / MODEL	SERVICE	REFRIGERANT	NOMINAL TONS	AMB TEMP	EVAPORATOR					ELECTRICAL DATA			REMARKS
						FLUID	FLOW RATE (GPM)	FPD (FT HD)	EFT	LFT	MCA	MOP	VOLTS/PH	
CH-1	TRANE / CGAM040	AHU-1 COOLING COIL	R410A	40	90°F	40% P.G.	90.5	<28'	52°F	42°F	94.6	110	460/3	AIR COOOLD, EXTERIOR MOUNTED, HELICAL ROTARY TYPE COMPRESSORS

FAN SCHEDULE

TAG	MFGR / MODEL	SERVICE	FAN TYPE	AIRFLOW (CFM)	ESP (IN WG)	DRIVE	SONES	MOTOR DATA		REMARKS
								HP	VOLTS/PH	
EF-1	PENN / DX30B	APPARATUS BAY EXHAUST	CENTRIFUGAL	8,200	0.375"	BELT	<16.0	1-1/2	460/3	INTERLOCK WITH MAKE-UP AIR UNIT
EF-2	EXISTING	COMPRESSOR ROOM EXHAUST	CENTRIFUGAL	4,720	0.25"	DIRECT	---	1	460/3	EXISTING FAN
EF-3	PENN / DX08B	RESTROOM EXHAUST	CENTRIFUGAL	700	0.50"	BELT	<9.0	1/4	120/1	VARIABLE SPEED CONTROLLER MOUNTED UNDER MOTOR DOME
EF-4	PENN / DX06B	RESTROOM EXHAUST	CENTRIFUGAL	200	0.25"	BELT	<7.0	1/4	120/1	VARIABLE SPEED CONTROLLER MOUNTED UNDER MOTOR DOME

SEQUENCE OF OPERATIONS

PREBID REQUIREMENTS

BIDDING CONTRACTORS SHALL REVIEW EXHIBIT DRAWINGS FROM ORIGINAL DESIGN AND WALK THROUGH THE FACILITY TO REVIEW EXISTING PNEUMATIC SYSTEM AND THE EQUIPMENT BEING CONTROLLED BY IT. CONTRACTOR TO REPORT ANY ADDITIONAL SCOPE OF WORK NOT DESCRIBED IN THE BIDDING DOCUMENTS THEY OBSERVE TO THE OWNER BEFORE BIDDING:

OPERATION MODE TIME SCHEDULES

SYSTEMS SHALL BE PROVIDED WITH INDEPENDENT OCCUPIED, UNOCCUPIED, START-UP AND OVERRIDE MODE SCHEDULES AS APPLICABLE. PROVIDE GRAPHIC INPUT AND DISPLAY INTERFACE FOR ALL SCHEDULES. PROVIDE MANUAL ACTIVATED UNOCCUPIED OVERRIDE MODE FOR ALL SYSTEMS. OCCUPIED, UNOCCUPIED, START-UP AND OVERRIDE MODES SHALL INCLUDE NOT LIMITED TO THE FOLLOWING:

HYDRONIC HEATING AND AIR HANDLING SYSTEMS

- OCCUPIED OPERATION INITIALLY SET FOR 6 AM TO 6 PM. (ADJUSTABLE). MONDAY THROUGH FRIDAY (ADJUSTABLE).
- START-UP OPERATION SHALL START BEFORE OCCUPIED MODE WITH OPTIMUM START DETERMINATION BASED ON BUILDING TRENDING. DISPLAY CURRENT START_UP START TIME.
- OVERRIDE OPERATION SHALL RUN FOR 4 HOURS (ADJUSTABLE).
- UNOCCUPIED OPERATION AT ALL OTHER TIMES NOT REFERENCED ABOVE AND HOLIDAYS. HOLIDAY SCHEDULE (ADJUSTABLE).

POWER FAILURE START-UP

UPON BUILDING POWER RESTORATION AFTER A POWER FAILURE, THE BUILDINGS MECHANICAL SYSTEMS SHALL RESTART. PROVIDE TIME DELAY BETWEEN EQUIPMENT START UPS TO AVOID POWER SURGE.

GLYCOL MIX TANKS (GT-1 AND GT-2)

INTEGRAL CONTROLS SHALL CONTROL PUMP TO MAINTAIN SYSTEM PRESSURE SETPOINT. PROVIDE LOW LEVEL ALARM PANEL WITH SELECTABLE AUDIBLE ALARM AND REMOTE MONITORING DRY CONTACTS.

NO CONTROL BY DDC SYSTEM. MONITORING BY DDC SYSTEM AS INDICTED BELOW.

SYSTEM INDICATION

- GRAPHIC INTERFACE
- SYSTEM PRESSURE STATUS
- SYSTEM LOW PRESSURE ALARM
- SYSTEM LOW PRESSURE ALARM SETPOINT (5 PSIG, ADJUSTABLE)
- LOW LEVEL ALARM

DOMESTIC HOT WATER GENERATOR SYSTEM (EXISTING)

INTEGRAL CONTROLS SHALL MAINTAIN A TEMPERATURE OF 120°F (ADJUSTABLE, MANUALLY SET).

NO CONTROL BY DDC SYSTEM. MONITORING BY DDC SYSTEM AS INDICTED BELOW.

SYSTEM INDICATION

- GRAPHIC INTERFACE
- BUILDING HOT WATER SUPPLY WATER TEMPERATURE
- HIGH TEMPERATURE ALARM (>125°F, ADJUSTABLE)

BOILERS AND BOILER CIRCULATION PUMPS (B-1 AND B-2, BC-1 AND BC-2)

BOILER'S INTEGRAL CONTROLS SHALL BE CAPABLE OF COMMUNICATING WITH EACH OTHER, ALLOWING SEQUENCING OF ALL BOILERS TO OPTIMIZE BOILER PLANT ENERGY EFFICIENCY. THE BOILER'S INTEGRAL CONTROLS SHALL BE CAPABLE OF PROVIDING CONTROL AS FOLLOWS.

BOILERS SHALL MAINTAIN BUILDING SUPPLY TEMPERATURE SETPOINT. THE BUILDING SUPPLY TEMPERATURE SETPOINT SHALL RESET LINEARLY BETWEEN 120°F AND 180°F BASED ON AN OUTDOOR AIR RESET SCHEDULE BETWEEN 65°F AND 10°F RESPECTIVELY. ALL RESET TEMPERATURE SETPOINTS SHALL BE ADJUSTABLE. BOILER CONTROLLER SHALL ENABLE THE BOILER ON OUTSIDE AIR TEMPERATURES OF 65°F AND LOWER OR WITH CALL FOR DOMESTIC HOT WATER HEAT. BOILER CONTROLLER SHALL DISABLE THE BOILER ON OUTSIDE AIR TEMPERATURES OF 66°F AND HIGHER AND NO CALL FOR DOMESTIC HOT WATER HEAT.

BOILER'S INTEGRAL CONTROLS SHALL MODULATE ITS BURNER AND OPERATE THE BOILER CIRCULATION PUMP TO MAINTAIN INTERNAL AQUASTAT TEMPERATURE. THE INTERNAL AQUASTAT TEMPERATURE SETPOINT SHALL RESET LINEARLY BETWEEN 130°F AND 190°F BASED ON AN OUTDOOR AIR RESET SCHEDULE BETWEEN 65°F AND 10°F RESPECTIVELY. ALL RESET TEMPERATURE SETPOINTS SHALL BE ADJUSTABLE.

BOILER'S INTEGRAL CONTROLS SHALL SWITCH FROM NATURAL GAS TO PROPANE GAS ON DETECTION OF MINIMUM PRESSURE AT NATURAL GAS PIPING.

PROVIDE ALL TRIM AS REQUIRED BY THE INTERNATIONAL MECHANICAL CODE CHAPTER 10.

NO CONTROL BY DDC SYSTEM. MONITORING BY DDC SYSTEM.

SYSTEM INDICATION

- GRAPHIC INTERFACE
- SYSTEM STATUS
- OUTSIDE AIR TEMPERATURE
- BOILER ENABLE/DISABLE STATUS
- BOILER FIRING RATE
- BOILER CURRENT GAS SUPPLY
- BUILDING SUPPLY HEADER TEMPERATURE
- BUILDING RETURN HEADER TEMPERATURE
- BOILER SUPPLY HEADER TEMPERATURE
- BOILER RETURN HEADER TEMPERATURE
- BOILER TROUBLE ALARM

HEAT EXCHANGER (HE-1)

CONTROL BY DDC SYSTEM.

THREE WAY VALVE SHALL MODULATE TO MAINTAIN HEATING GLYCOL SUPPLY TEMPERATURE SETPOINT.

SYSTEM INDICATION

- GRAPHIC INTERFACE
- GLYCOL SUPPLY SETPOINT (120°F, ADJUSTABLE)
- HEATING WATER SUPPLY TEMPERATURE AT HEAT EXCHANGER
- HEATING WATER RETURN TEMPERATURE AT HEAT EXCHANGER
- HEATING GLYCOL SUPPLY TEMPERATURE AT HEAT EXCHANGER
- HEATING GLYCOL RETURN TEMPERATURE AT HEAT EXCHANGER
- HEATING GLYCOL SUPPLY TEMPERATURE DOWNSTREAM OF MIX VALVE

DUCT REHEAT COIL (EXISTING)

CONTROL BY DDC SYSTEM.

OPERATION MODES:

OPERATION MODES SHALL BE CONTROLLED BY THE DDC CONTROLLER'S INTERNAL CLOCK.

OCCUPIED MODE

ON CALL FOR HEAT FROM WALL MOUNTED THERMOSTAT (ADJUSTABLE), TWO WAY MODULATING CONTROL VALVE SHALL MODULATE TO MAINTAIN ROOM TEMPERATURE SETPOINT.

UNOCCUPIED MODE (ADMIN AREAS)

ON CALL FOR HEAT FROM WALL MOUNTED THERMOSTAT (ADJUSTABLE), TWO WAY MODULATING CONTROL VALVE SHALL MODULATE TO MAINTAIN ROOM TEMPERATURE SETPOINT. PROVIDE UNOCCUPIED MODE TEMPERATURE SETBACK.

START-UP MODE

SYSTEM SHALL OPERATE IN OCCUPIED MODE.

OVERRIDE MODE

SYSTEM SHALL OPERATE IN OCCUPIED MODE.

SYSTEM INDICATION

- GRAPHIC INTERFACE
- SPACE TEMPERATURE
- SPACE TEMPERATURE SETPOINT (70°F, ADJUSTABLE)
- NIGHT SETBACK TEMPERATURE SETPOINT (55°F, ADJUSTABLE)
- LOW SPACE TEMPERATURE ALARM
- LOW SPACE TEMPERATURE ALARM SETPOINT (40°F, ADJUSTABLE)
- HIGH SPACE TEMPERATURE INDICATION
- HIGH SPACE TEMPERATURE INDICATION SETPOINT (75°F, ADJUSTABLE)

BASEBOARD (EXISTING)

CONTROL BY DDC SYSTEM.

OPERATION MODES:

OPERATION MODES SHALL BE CONTROLLED BY THE DDC CONTROLLER'S INTERNAL CLOCK.

OCCUPIED MODE

ON CALL FOR HEAT FROM WALL MOUNTED THERMOSTAT (ADJUSTABLE), TWO WAY CONTROL VALVE SHALL OPEN.

UNOCCUPIED MODE (ADMIN AREAS)

ON CALL FOR HEAT FROM WALL MOUNTED THERMOSTAT (ADJUSTABLE), TWO WAY CONTROL VALVE SHALL OPEN. PROVIDE UNOCCUPIED MODE TEMPERATURE SETBACK.

START-UP MODE

SYSTEM SHALL OPERATE IN OCCUPIED MODE.

OVERRIDE MODE

SYSTEM SHALL OPERATE IN OCCUPIED MODE.

SYSTEM INDICATION

- GRAPHIC INTERFACE
- SPACE TEMPERATURE
- SPACE TEMPERATURE SETPOINT (70°F, ADJUSTABLE)
- NIGHT SETBACK TEMPERATURE SETPOINT (55°F, ADJUSTABLE)
- LOW SPACE TEMPERATURE ALARM
- LOW SPACE TEMPERATURE ALARM SETPOINT (40°F, ADJUSTABLE)
- HIGH SPACE TEMPERATURE INDICATION
- HIGH SPACE TEMPERATURE INDICATION SETPOINT (75°F, ADJUSTABLE)

RADIANT ZONES (CP-6 AND CP-10, EXISTING)

CONTROL BY DDC SYSTEM.

OPERATION MODES

OPERATION MODES SHALL BE CONTROLLED BY THE DDC CONTROLLER'S INTERNAL CLOCK.

OCCUPIED MODE

ON CALL FOR HEAT FROM WALL MOUNTED THERMOSTAT (ADJUSTABLE), CONTROL VALVE SHALL OPEN AND ZONE PUMP SHALL OPERATE.

SUPPLY FLUID TEMPERATURE TO ZONE SET MANUALLY AT ZONE'S TEMPERING VALVE.

UNOCCUPIED MODE

OPERATE IN OCCUPIED MODE.

SYSTEM INDICATION

- GRAPHIC INTERFACE
- SPACE TEMPERATURE (EACH ZONE)
- SPACE TEMPERATURE SETPOINT (65°F FOR ROOM 207, 60°F FOR APPARATUS BAY ADJUSTABLE)
- LOW SPACE TEMPERATURE ALARM
- LOW SPACE TEMPERATURE ALARM SETPOINT (40°F, ADJUSTABLE)
- HIGH SPACE TEMPERATURE INDICATION
- HIGH SPACE TEMPERATURE INDICATION SETPOINT (75°F, ADJUSTABLE)

SNOWMELT ZONES (CP-7, CP-8 AND CP-9, EXISTING)

CONTROL BY DDC SYSTEM OR PACKAGED SNOWMELT CONTROLLER. PROVIDE SNOW/MOISTURE SLAB TEMPERATURE SENSOR AT APPARATUS BAY APRON.

OPERATION MODES

ON TEMPERATURES BETWEEN WARM WEATHER CUT-OFF AND COLD WEATHER CUT-OFF AND NO DETECTION OF SNOW/MOISTURE THE SLAB SHALL BE IN IDLE MODE AT 31°F, ADJUSTABLE. ZONE PUMP SHALL RUN TO MAINTAIN SLAB TEMPERATURE.

ON TEMPERATURES BETWEEN WARM WEATHER CUT-OFF AND COLD WEATHER CUT-OFF AND DETECTION OF SNOW/MOISTURE THE SLAB SHALL BE IN MELT MODE. SYSTEM SHALL RUN A MINIMUM RUN TIME AFTER THERE HAS BEEN NO SNOW/MOISTURE DETECTED AT SLAB SENSOR. ZONE PUMP SHALL RUN UNTIL NO SNOW/MOISTURE IS DETECTED AND MINIMUM RUN TIME HAS EXPIRED.

SUPPLY FLUID TEMPERATURE TO SNOWMELT ZONE SET MANUALLY AT ZONE'S TEMPERING VALVE.

SYSTEM INDICATION

- GRAPHIC INTERFACE
- SYSTEM STAUS
- OUTSIDE AIR TEMPERATURE
- IDLE MODE TEMPERATURE SETPOINT (31°F, ADJUSTABLE)
- COLD WEATHER SHUT-OFF TEMPERATURE (0°F, ADJUSTABLE)
- WARM WEATHER SHUT-OFF TEMPERATURE (34°F, ADJUSTABLE)
- SNOW/MOISTURE DETECTION
- SLAB TEMPERATURE
- MINIMUM RUN TIME AFTER NO SNOW/MOISTURE DETECTION (4 HOURS, ADJUSTABLE)

GAS FIRED UNIT HEATERS (EXISTING)

CONTROL BY DDC SYSTEM.

OPERATION MODE

ON CALL FOR HEAT FROM WALL MOUNTED THERMOSTAT (ADJUSTABLE), UNIT SHALL OPERATE.

SYSTEM INDICATION

- GRAPHIC INTERFACE
- SPACE TEMPERATURE
- SPACE TEMPERATURE SETPOINT (65°F, ADJUSTABLE)
- LOW SPACE TEMPERATURE ALARM
- LOW SPACE TEMPERATURE ALARM SETPOINT (40°F, ADJUSTABLE)
- HIGH SPACE TEMPERATURE INDICATION
- HIGH SPACE TEMPERATURE INDICATION SETPOINT (80°F, ADJUSTABLE)

HYDRONIC UNIT HEATERS (EXISTING)

CONTROL BY DDC SYSTEM.

OPERATION MODE

ON CALL FOR HEAT FROM WALL MOUNTED THERMOSTAT (ADJUSTABLE), FAN SHALL CYCLE. THE COIL SHALL RUN WILD.

SYSTEM INDICATION

- GRAPHIC INTERFACE
- SPACE TEMPERATURE
- SPACE TEMPERATURE SETPOINT (70°F, ADJUSTABLE)
- LOW SPACE TEMPERATURE ALARM
- LOW SPACE TEMPERATURE ALARM SETPOINT (40°F, ADJUSTABLE)
- HIGH SPACE TEMPERATURE INDICATION
- HIGH SPACE TEMPERATURE INDICATION SETPOINT (90°F, ADJUSTABLE)

** SEQUENCE CONTINUED ON M0.03 **

K+A designstudios
ARCHITECTURE + PLANNING
130 TRADING BAY RD SUITE 330 KENAI, ALASKA 99611
T: 907.283.0880 WWW.KA-DESIGNSTUDIOS.COM

T3 ALASKA
Mechanical & Electrical Engineering
301 Calista Court, Suite 100
Anchorage, Alaska 99518
Ph: 907-865-7900 AECL 1625

Morrison Maierle
engineers · surveyors · planners · scientists

ALASKA REGIONAL FIRE TRAINING CENTER BUILDING REHABILITAION
BID DOCUMENTS
KENAI, ALASKA

Revisions:

STATE OF ALASKA 49 TH
ALEC C. THOMSON
ME-8694
07/31/19
REGISTERED PROFESSIONAL ENGINEER

Date: JULY 31, 2019
Drawn: STH
Checked: ACT
Project: 2019.053.0
File Name: 19053-M01

Sheet Title:
SCHEDULES AND SEQUENCE OF OPERATIONS

Sheet:
M0.2

© Copyright T3 Alaska, LLC

SEQUENCE OF OPERATIONS - CONTINUED

CABINET UNIT HEATERS (EXISTING)

CONTROL BY DDC SYSTEM.

OPERATION MODE

ON CALL FOR HEAT FROM WALL MOUNTED THERMOSTAT (ADJUSTABLE), FAN SHALL CYCLE. THE COIL SHALL RUN WILD.

SYSTEM INDICATION

- GRAPHIC INTERFACE
- SPACE TEMPERATURE
- SPACE TEMPERATURE SETPOINT (65°F, ADJUSTABLE)
- LOW SPACE TEMPERATURE ALARM
- LOW SPACE TEMPERATURE ALARM SETPOINT (36°F, ADJUSTABLE)
- HIGH SPACE TEMPERATURE INDICATION
- HIGH SPACE TEMPERATURE INDICATION SETPOINT (90°F, ADJUSTABLE)

HYDRONIC GLYCOL HEATING PUMP (CP-1A AND CP-1B)

CONTROL BY DDC SYSTEM.

PUMPS SHALL OPERATE CONTINUOUSLY WHEN OUTSIDE AIR TEMPERATURE IS AT THE ON-OFF SETPOINT OR LESS. IF PUMP FAILS TO START AS COMMANDED, SIGNAL ALARM. PUMP VFD SHALL MODULATE TO MAINTAIN HYDRONIC SYSTEM DIFFERENTIAL PRESSURE SETPOINT. DETERMINE THE APPROPRIATE DIFFERENTIAL PRESSURE SETPOINT DURING BALANCING OF SYSTEM.

PUMPS SHALL OPERATE IN A LEAD - STANDBY CONFIGURATION WHEN OUTSIDE AIR TEMPERATURE IS AT THE ON-OFF SETPOINT OR LESS. LEAD PUMP SHALL RUN CONTINUOUSLY. IF PUMP FAILS TO START AS COMMANDED, SIGNAL ALARM AND STANDBY PUMP SHALL OPERATE. LEAD - STANDBY PUMP DESIGNATION SHALL ROTATE AFTER PUMP ROTATION SETPOINT HAS BEEN MET.

SYSTEM INDICATION

- GRAPHIC INTERFACE
- SYSTEM STATUS
- OUTSIDE AIR TEMPERATURE
- OUTSIDE AIR TEMPERATURE ON-OFF SETPOINT (65°F, ADJUSTABLE)
- HEATING FLUID LOOP SUPPLY TEMPERATURE
- HEATING FLUID LOOP RETURN TEMPERATURE
- LEAD PUMP INDICATION
- LEAD PUMP STATUS
- STANDBY PUMP STATUS
- PUMP FAILURE ALARM
- PUMP HOURS - TOTAL, EACH PUMP
- PUMP HOURS - CURRENT ROTATION
- PUMP ROTATION SETPOINT (168 HOURS, ADJUSTABLE)
- DIFFERENTIAL PRESSURE SETPOINT
- DIFFERENTIAL PRESSURE
- VFD OUTPUT, EACH PUMP

HYDRONIC HEATING PUMP (CP-2)

PUMP SHALL OPERATE CONTINUOUSLY WHEN OUTSIDE AIR TEMPERATURE IS AT THE ON-OFF SETPOINT OR LESS. IF PUMP FAILS TO START AS COMMANDED, SIGNAL ALARM.

SYSTEM INDICATION

- GRAPHIC INTERFACE
- SYSTEM STATUS
- OUTSIDE AIR TEMPERATURE
- OUTSIDE AIR TEMPERATURE ON-OFF SETPOINT (65°F, ADJUSTABLE)
- HEATING FLUID LOOP SUPPLY TEMPERATURE
- HEATING FLUID LOOP RETURN TEMPERATURE
- PUMP FAILURE ALARM
- PUMP HOURS

HYDRONIC GLYCOL HEATING PUMP (CP-3)

PUMP SHALL OPERATE CONTINUOUSLY WHEN OUTSIDE AIR TEMPERATURE IS AT THE ON-OFF SETPOINT OR LESS. IF PUMP FAILS TO START AS COMMANDED, SIGNAL ALARM.

SYSTEM INDICATION

- GRAPHIC INTERFACE
- SYSTEM STATUS
- OUTSIDE AIR TEMPERATURE
- OUTSIDE AIR TEMPERATURE ON-OFF SETPOINT (65°F, ADJUSTABLE)
- HEATING FLUID LOOP SUPPLY TEMPERATURE
- HEATING FLUID LOOP RETURN TEMPERATURE
- PUMP FAILURE ALARM
- PUMP HOURS

DOMESTIC WATER TANK CIRCULATION PUMP (CP-4, EXISTING)

PUMP SHALL OPERATE CONTINUOUSLY. IF PUMP FAILS TO RUN, SIGNAL ALARM.

SYSTEM INDICATION

- GRAPHIC INTERFACE
- PUMP STATUS
- PUMP FAILURE ALARM
- PUMP HOURS

DOMESTIC WATER RECIRCULATION PUMP (CP-5, EXISTING)

PUMP SHALL OPERATE CONTINUOUSLY. IF PUMP FAILS TO RUN, SIGNAL ALARM.

SYSTEM INDICATION

- GRAPHIC INTERFACE
- PUMP STATUS
- PUMP FAILURE ALARM
- PUMP HOURS

HYDRONIC GLYCOL COOLING PUMP (CP-11)

PUMP SHALL OPERATE CONTINUOUSLY WHEN OUTSIDE AIR TEMPERATURE IS AT THE ON-OFF SETPOINT OR MORE. IF PUMP FAILS TO START AS COMMANDED, SIGNAL ALARM.

SYSTEM INDICATION

- GRAPHIC INTERFACE
- SYSTEM STATUS
- OUTSIDE AIR TEMPERATURE
- OUTSIDE AIR TEMPERATURE ON-OFF SETPOINT (56°F, ADJUSTABLE)
- COOLING FLUID LOOP SUPPLY TEMPERATURE
- COOLING FLUID LOOP RETURN TEMPERATURE
- PUMP FAILURE ALARM
- PUMP HOURS

AIR HANDLING UNIT (AHU-1, EXISTING)

DDC SYSTEM SHALL OPERATE UNIT.

START-UP MODE

IF THE BUILDING HAS CALL FOR HEATING, AT THE BEGINNING OF START-UP MODE THE RETURN AIR DAMPERS SHALL OPEN 100% AND OUTSIDE AIR DAMPERS SHALL BE CLOSED. THE FAN SHALL RUN. WHEN RETURN AIR TEMPERATURE RISES TO 70°F (ADJUSTABLE) THE SYSTEM SHALL SWITCH TO OCCUPIED MODE OPERATION.

IF THE BUILDING HAS CALL FOR COOLING AND THE OUTSIDE AIR TEMPERATURES DOES NOT ALLOW FOR ECONOMIZER COOLING AT THE BEGINNING OF START UP MODE THE RETURN AIR DAMPERS SHALL OPEN 100% AND OUTSIDE AIR DAMPERS SHALL BE CLOSED. COOLING SYSTEM SHALL OPERATE TO MAINTAIN COOLING SUPPLY AIR TEMPERATURE SETPOINT OF 55°F (ADJUSTABLE). WHEN RETURN AIR TEMPERATURE FALLS TO 75°F (ADJUSTABLE) THE SYSTEM SHALL SWITCH TO OCCUPIED MODE OPERATION.

IF THE BUILDING HAS CALL FOR COOLING AND THE OUTSIDE AIR TEMPERATURES DOES ALLOW FOR ECONOMIZER COOLING AT THE BEGINNING OF START UP MODE, THE SYSTEM SHALL MODULATE ECONOMIZER OUTSIDE AIR DAMPERS AND RETURN AIR DAMPERS AS REQUIRED TO MEET SUPPLY AIR TEMPERATURE SETPOINT WITH OUTSIDE AIR. ECONOMIZER MODE SHALL BE ENABLED WHENEVER OUTSIDE AIR TEMPERATURE IS LESS THAN RETURN AIR TEMPERATURE ON A CALL FOR COOLING. THE DAMPERS SHALL BE SEQUENCED WITH THE COOLING SYSTEM. WHEN RETURN AIR TEMPERATURE FALLS TO 75°F (ADJUSTABLE) THE SYSTEM SHALL SWITCH TO OCCUPIED MODE OPERATION.

OCCUPIED MODE

THE UNIT SHALL RUN CONTINUOUSLY.

OUTSIDE AIR DAMPERS SHALL PROVIDE THE MINIMUM OUTSIDE AIR REQUIRED. OUTSIDE AIR AIRFLOW QUANTITY SHALL BE A SET MINIMUM DAMPER POSITION DETERMINED DURING SYSTEM BALANCING.

THE OUTSIDE AIR DAMPERS, RETURN DAMPERS AND THE COOLING COIL SHALL MODULATE TO MAINTAIN A SUPPLY AIR TEMPERATURE SETPOINT BASED ON THE WORST CASE COOLING ZONE.

WHEN THE OUTSIDE AIR TEMPERATURES ALLOW FOR ECONOMIZER COOLING THE SYSTEM SHALL MODULATE ECONOMIZER OUTSIDE AIR DAMPERS AND RETURN AIR DAMPERS AS REQUIRED TO MEET SUPPLY AIR TEMPERATURE SETPOINT WITH OUTSIDE AIR. ECONOMIZER MODE SHALL BE ENABLED WHENEVER OUTSIDE AIR TEMPERATURE IS LESS THAN RETURN AIR TEMPERATURE ON A CALL FOR COOLING. THE DAMPERS SHALL BE SEQUENCED WITH THE COOLING SYSTEM.

UNOCCUPIED MODE

THE UNIT SHALL BE OFF. OUTSIDE AIR DAMPERS SHALL BE SHUT RETURN DAMPERS SHALL BE OPEN. ON LOW TEMPERATURE ALARM FROM HEAT FROM ANY ZONE THE UNIT SHALL OPERATE IN START UP HEATING MODE.

OVERRIDE MODE

UNIT SHALL OPERATE IN OCCUPIED MODE.

BUILDING PRESSURE

ON BUILDING HIGH STATIC ALARM, 0.07" W.C., (ADJUSTABLE) THE UNIT SHALL STOP AND THE OUTSIDE AIR DAMPERS SHALL CLOSE. SIGNAL ALARM.

FREEZE PROTECTION

IF SUPPLY AIR TEMPERATURE IS BELOW FREEZE ALARM SETPOINT THE UNIT SHALL STOP, THE OUTSIDE AIR DAMPERS SHALL CLOSE. SIGNAL ALARM.

SMOKE DETECTION

PROVIDE SMOKE DETECTOR IN RETURN AIR DUCT WORK. IF SMOKE IS DETECTED, THE FAN SHALL STOP AND THE OUTSIDE AIR DAMPERS SHALL CLOSE. SIGNAL ALARM TO FIRE ALARM SYSTEM.

CHILLER (CH-1)

INTEGRAL CONTROLS SHALL OPERATE CHILLER. DDC SYSTEM SHALL ENABLE/DISABLE CHILLER. THE CHILLER SHALL BE ENABLED WHEN OUTSIDE AIR EXCEED ENABLED TEMPERATURE SETPOINT.

SYSTEM INDICATION

- GRAPHIC INTERFACE
- OUTSIDE AIR TEMPERATURE
- ENABLE/DISABLE STATUS
- ENABLE SETPOINT (58°F, ADJUSTABLE)
- COOLING FLUID SUPPLY TEMPERATURE
- COOLING FLUID RETURN TEMPERATURE
- HIGH SUPPLY TEMPERATURE ALARM
- CHILLER GENERAL ALARMS

MOTORIZED DUCT DAMPERS (EXISTING)

CONTROL BY DDC SYSTEM.

OPERATION MODE

OPERATION MODES SHALL FOLLOW AIR HANDLING UNIT OPERATION MODES.

OCCUPIED MODE

ROOM THERMOSTAT SHALL MODULATE VARIABLE VOLUME DAMPER OPERATOR, LOCATED IN DUCT TO PROVIDE COOLING.

SYSTEM INDICATION

- GRAPHIC INTERFACE
- TEMPERATURE SETPOINT IN ZONE
- TEMPERATURE OF ZONE

RESTROOM EXHAUST FAN (EF-3 AND EF-4)

CONTROL BY DDC SYSTEM.

OPERATION MODE

OPERATION MODES SHALL BE CONTROLLED BY THE DDC CONTROLLER'S INTERNAL CLOCK.

OCCUPIED MODE

UNIT SHALL RUN CONTINUOUSLY.

UNOCCUPIED MODE

UNIT SHALL BE OFF.

START-UP MODE

SYSTEM SHALL OPERATE IN OCCUPIED MODE.

OVERRIDE MODE

SYSTEM SHALL OPERATE IN OCCUPIED MODE.

SYSTEM INDICATION

- GRAPHIC INTERFACE
- SYSTEM STATUS
- FAN STATUS

MAKE UP AIR UNIT AND EXHAUST FAN (EF-1)

CONTROL BY DDC SYSTEM.

OPERATION MODE

MAKE UP AIR UNIT AND EXHAUST FAN, EF-1, SHALL BE INTERLOCKED.

MAKE-UP AIR UNIT'S SHALL FIRE BURNER TO MAINTAIN 50°F (ADJUSTABLE) SUPPLY AIR.

PROVIDE MANUAL ON-OFF SWITCH IN APPARATUS BAY.

ON DETECTION OF RELATIVE HUMIDITY ABOVE 50% (ADJUSTABLE) IN APPARATUS BAY, THE SYSTEM SHALL OPERATE UNTIL RELATIVE HUMIDITY FALLS BELOW ACTIVATION THRESHOLD.

ON DETECTION OF CO OR NO2 IN APPARATUS BAY, THE SYSTEM SHALL OPERATE UNTIL CO AND/OR NO2 LEVELS FALL BELOW ACTIVATION THRESHOLD. PROVIDE CO/NO2 DETECTOR FOR APPARATUS BAY. REFER TO GAS DETECTOR MANUFACTURER'S RECOMMENDATION FOR ACTIVATION THRESHOLD SETPOINTS.

SYSTEM INDICATION

- GRAPHIC INTERFACE
- SYSTEM STATUS
- RELATIVE HUMIDITY
- RELATIVE HUMIDITY ACTIVATION SETPOINT (50% R.H., ADJUSTABLE)
- CO LEVEL
- NO2 LEVEL
- CO/NO2 DETECTION

BREATHING AIR COMPRESSOR ROOM EXHAUST FAN SYSTEM (EF-2, EXISTING)

CONTROL BY DDC SYSTEM.

FAN SHALL OPERATE ON TEMPERATURE RISE BASED ON ADJUSTABLE ROOM THERMOSTAT SETPOINT. THE INTAKE AIR AND EXHAUST AIR DAMPERS SHALL OPEN WHEN FAN IS OPERATING.

SYSTEM INDICATION

- GRAPHIC INTERFACE
- FAN STATUS
- SPACE TEMPERATURE
- SPACE TEMPERATURE SETPOINT (70°F, ADJUSTABLE)
- LOW TEMPERATURE ALARM
- LOW TEMPERATURE ALARM SETPOINT (40°F, ADJUSTABLE)
- HIGH TEMPERATURE INDICATION
- HIGH TEMPERATURE ALARM SETPOINT (90°F, ADJUSTABLE)

GENERATOR ROOM VENTILATION (EXISTING)

CONTROL BY DDC SYSTEM.

WHEN THE GENERATOR IS NOT RUNNING, THE OUTSIDE AIR AND EXHAUST AIR DAMPERS SHALL BE CLOSED AND THE RECIRCULATION DAMPER SHALL BE OPEN.

WHEN THE GENERATOR STARTS, THE OUTSIDE AIR DAMPER SHALL OPEN 10%. IF THE OUTSIDE AIR DAMPER DOES NOT OPEN, INITIATE ALARM.

WHEN THE GENERATOR IS RUNNING, THE OUTSIDE AIR DAMPER SHALL BE OPEN A MINIMUM OF 10%. THE OUTSIDE AIR, EXHAUST AIR AND RECIRCULATION AIR DAMPERS SHALL MODULATE TO MAINTAIN THE ROOM TEMPERATURE.

ON HIGH OR LOW SPACE TEMPERATURE INITIATE ALARM.

PROVIDE GENERAL TROUBLE ALARM INTERFACED WITH ENGINE GENERATOR SYSTEM.

SYSTEM INDICATION

- GRAPHIC INTERFACE
- GENERATOR - ON/OFF STATUS
- SPACE TEMPERATURE
- SPACE TEMPERATURE SETPOINT DURING GENERATOR OPERATION (80°F, ADJUSTABLE)
- LOW SPACE TEMPERATURE ALARM
- LOW SPACE TEMPERATURE ALARM SETPOINT (35°F, ADJUSTABLE)
- HIGH SPACE TEMPERATURE ALARM
- HIGH SPACE TEMPERATURE ALARM SETPOINT (100°F, ADJUSTABLE)
- OUTSIDE/COMBUSTION AIR CONTROL DAMPER POSITION (FULL OPEN / SHUT)
- EXHAUST AIR CONTROL DAMPER POSITION
- RECIRCULATION AIR CONTROL DAMPER POSITION
- ENGINE GENERATOR TROUBLE ALARM
- COMBUSTION AIR CONTROL DAMPER - NOT OPEN ALARM

THERMOSTATS

REPLACE ALL EXISTING THERMOSTATS/SENSOR ON EQUIPMENT TO BE CONTROLLED BY DDC SYSTEM. THERMOSTATS/SENSORS FOR DUCT COOLING ZONES, BASEBOARD ZONES, CABINET UNIT HEATER ZONES AND PUBLIC SPACES SHALL BE LOW VOLTAGE WITH SETTING AND UNOCCUPIED SETBACK CONTROL. HEATING ONLY OR HEATING AND COOLING AS REQUIRED. LOCKING COVER WITH SETPOINT ADJUSTMENT. SETPOINT INDICATION WITH THERMOMETER. DDC SYSTEM SHALL BE ABLE TO MONITOR AND CONTROL/LIMIT ALL SPACE TEMPERATURES. PROVIDE INSULATING BASE FOR THERMOSTATS MOUNTED ON EXTERIOR WALLS. PROVIDE SENSORS THAT ARE ADJUSTABLE ONLY THROUGH THE DDC SYSTEM AT PUBLIC SPACES AND AS INDICTED ON DRAWINGS.

SYSTEM INDICATION

- GRAPHIC INTERFACE
- SPACE TEMPERATURE SETPOINT
- NIGHT SETBACK TEMPERATURE SETPOINT
- SPACE TEMPERATURE
- LOW SPACE TEMPERATURE ALARM
- HIGH SPACE TEMPERATURE INDICATION

** END OF SEQUENCES **

K+A designstudios
ARCHITECTURE + PLANNING
130 TRADING BAY RD SUITE 330 KENAI, ALASKA 99611
T: 907.283.3680 WWW.KA-DESIGNSTUDIOS.COM

T3 ALASKA LLC
Mechanical & Electrical Engineering
301 Calista Court, Suite 100
Anchorage, Alaska 99518
Ph: 907-865-7900 AEC L 1625

Morrison Maierle
engineers · surveyors · planners · scientists

ALASKA REGIONAL
FIRE TRAINING CENTER
BUILDING REHABILITAION
BID DOCUMENTS
KENAI, ALASKA

Revisions:

STATE OF ALASKA 49TH
ALEC C. THOMSON
ME-8694
07/31/19
REGISTERED PROFESSIONAL ENGINEER

Date: JULY 31, 2019
Drawn: ACT
Checked: ACT
Project: 2019.053.0
File Name: 19053-M03

Sheet Title:
MECHANICAL SEQUENCE OF OPERATIONS

Sheet:
M0.3

© Copyright T3 Alaska, LLC

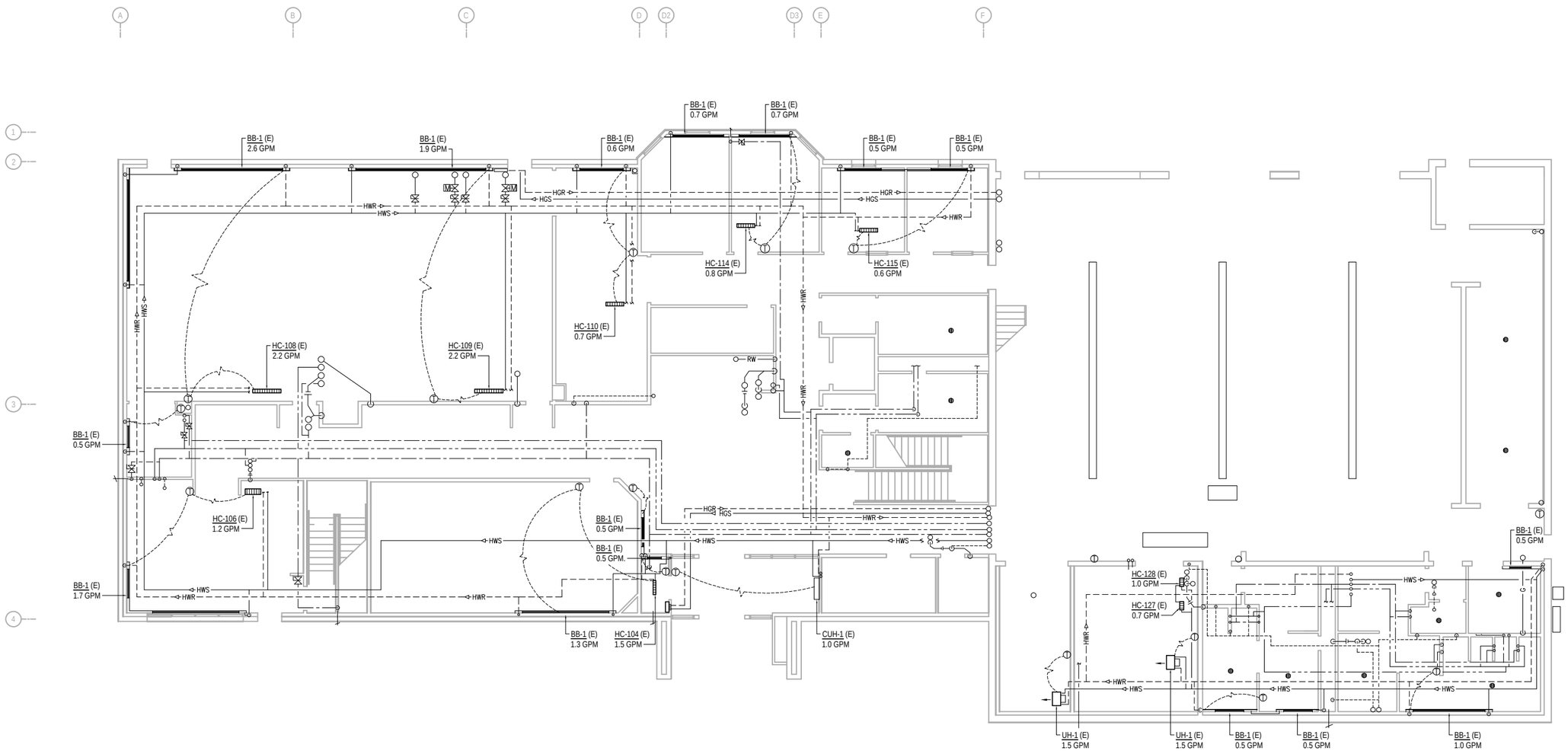

1 LOWER FLOOR PIPING PLAN

SCALE: 0 3' 12' 1' 6'

SHEET NOTES

1. EXISTING SYSTEMS SHOWN ON THE DRAWINGS ARE FROM RECORD DRAWINGS AND A NON-DESTRUCTIVE WALK THROUGH OF THE SPACE. ACTUAL SYSTEMS MAY VARY FROM THE INFORMATION INDICATED ON THE DRAWINGS. THE DRAWINGS MAY NOT SHOW ALL EXISTING SYSTEMS. CONTRACTOR TO FIELD VERIFY EXISTING CONDITIONS, LOCATIONS, SERVICE, AND SIZES BEFORE START OF WORK.
2. COORDINATE WITH BUILDING OWNER FOR ALL WORK TAKING PLACE IN OCCUPIED TENANT SPACES AND FOR WORK REQUIRING SHUT DOWN OF BUILDING SYSTEMS.
3. RE-BALANCE TERMINAL HEATING UNITS AND PUMPS TO VALUES INDICATED ON DRAWING AND/OR SCHEDULES.

K+A designstudios
ARCHITECTURE + PLANNING
130 TRADING BAY RD SUITE 330 KENAI, ALASKA 99611
T: 907.283.0880 WWW.KA-DESIGNSTUDIOS.COM

T3 ALASKA LLC
Mechanical & Electrical Engineering
301 Calista Court, Suite 100
Anchorage, Alaska 99518
Ph: 907-865-7900 AEL L 1625

Morrison Maierle
engineers · surveyors · planners · scientists

ALASKA REGIONAL FIRE TRAINING CENTER BUILDING REHABILITAION

BID DOCUMENTS
KENAI, ALASKA

Revisions:

STATE OF ALASKA 49TH
ALEC C. THOMSON
ME-8694
07/31/19
REGISTERED PROFESSIONAL ENGINEER

Date: JULY 31, 2019
Drawn: STH
Checked: ACT
Project: 2019.053.0
File Name: 19053–M11

Sheet Title:
LOWER FLOOR PIPING PLAN

Sheet:
M1.1

© Copyright T3 Alaska, LLC

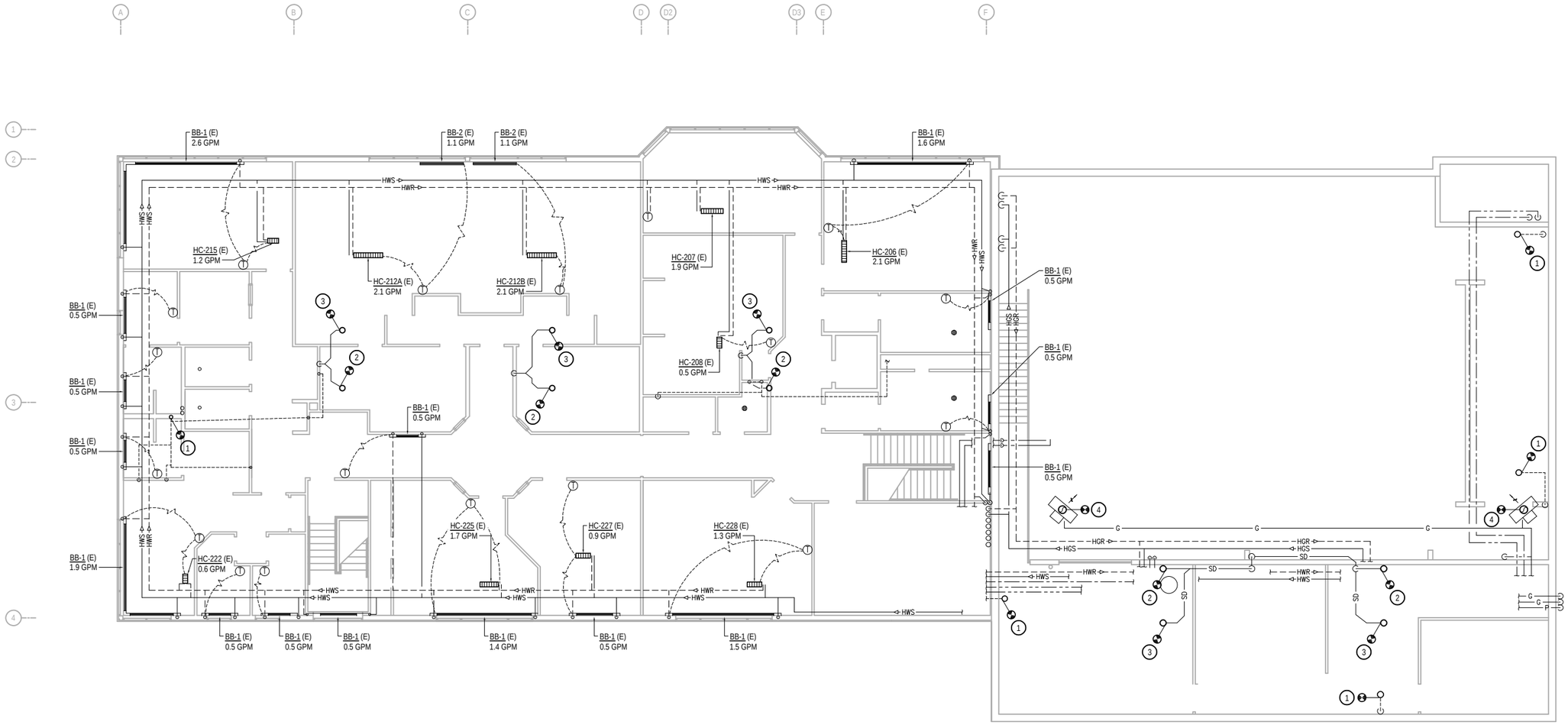

1 UPPER FLOOR PIPING PLAN

SCALE: 0 3' 12'
1' 6'

SHEET NOTES

1. EXISTING SYSTEMS SHOWN ON THE DRAWINGS ARE FROM RECORD DRAWINGS AND A NON-DESTRUCTIVE WALK THROUGH OF THE SPACE. ACTUAL SYSTEMS MAY VARY FROM THE INFORMATION INDICATED ON THE DRAWINGS. THE DRAWINGS MAY NOT SHOW ALL EXISTING SYSTEMS. CONTRACTOR TO FIELD VERIFY EXISTING CONDITIONS, LOCATIONS, SERVICE, AND SIZES BEFORE START OF WORK.
2. COORDINATE WITH BUILDING OWNER FOR ALL WORK TAKING PLACE IN OCCUPIED TENANT SPACES AND FOR WORK REQUIRING SHUT DOWN OF BUILDING SYSTEMS.
3. RE- BALANCE TERMINAL HEATING UNITS AND PUMPS TO VALUES INDICATED ON DRAWINGS AND/OR SCHEDULES.

KEY NOTES

1. EXISTING VENT THROUGH ROOF TO REMAIN AND EXTEND AS REQUIRED. FOR INSTALLATION REQUIREMENTS WITH RE-ROOF WORK, SEE 1/M6.1. COORDINATE WITH ARCHITECTURAL.
2. REMOVE EXISTING ROOF DRAIN ABOVE FOR INSTALLATION OF RD-1, SEE 2/M6.1. MODIFY EXISTING RAIN LEADER PIPING AS REQUIRED FOR RD-1 INSTALLATION WITH RE-ROOF. COORDINATE WITH ARCHITECTURAL.
3. REMOVE EXISTING OVERFLOW DRAIN ABOVE FOR INSTALLATION OF OD-1, SEE 2/M6.1. MODIFY EXISTING RAIN LEADER PIPING AS REQUIRED FOR OD-1 INSTALLATION WITH RE-ROOF. COORDINATE WITH ARCHITECTURAL.
4. EXISTING GAS-FIRED UNIT HEATER 10"Ø VENT, FIELD VERIFY, THROUGH ROOF TO REMAIN AND EXTEND AS REQUIRED. FOR INSTALLATION REQUIREMENTS WITH RE-ROOF WORK, SEE 5/M6.1. COORDINATE WITH ARCHITECTURAL.

K+A designstudios
ARCHITECTURE + PLANNING
130 TRADING BAY RD SUITE 330 KENAI, ALASKA 99611
T: 907.283.0880 WWW.KA-DESIGNSTUDIOS.COM

T3 ALASKA
301 Calista Court, Suite 100
Anchorage, Alaska 99518
Ph: 907-865-7900 AEC L 1625
Mechanical & Electrical Engineering

Morrison Maierle
engineers · surveyors · planners · scientists

ALASKA REGIONAL FIRE TRAINING CENTER BUILDING REHABILITAION

BID DOCUMENTS
KENAI, ALASKA

Revisions:

STATE OF ALASKA 49TH
ALEC C. THOMSON
ME-8694
07/31/19
REGISTERED PROFESSIONAL ENGINEER

Date: JULY 31, 2019
Drawn: STH
Checked: ACT
Project: 2019.053.0
File Name: 19053–M12

Sheet Title:
UPPER FLOOR PIPING PLAN

Sheet:
M1.2

5 of 15M

© Copyright T3 Alaska, LLC

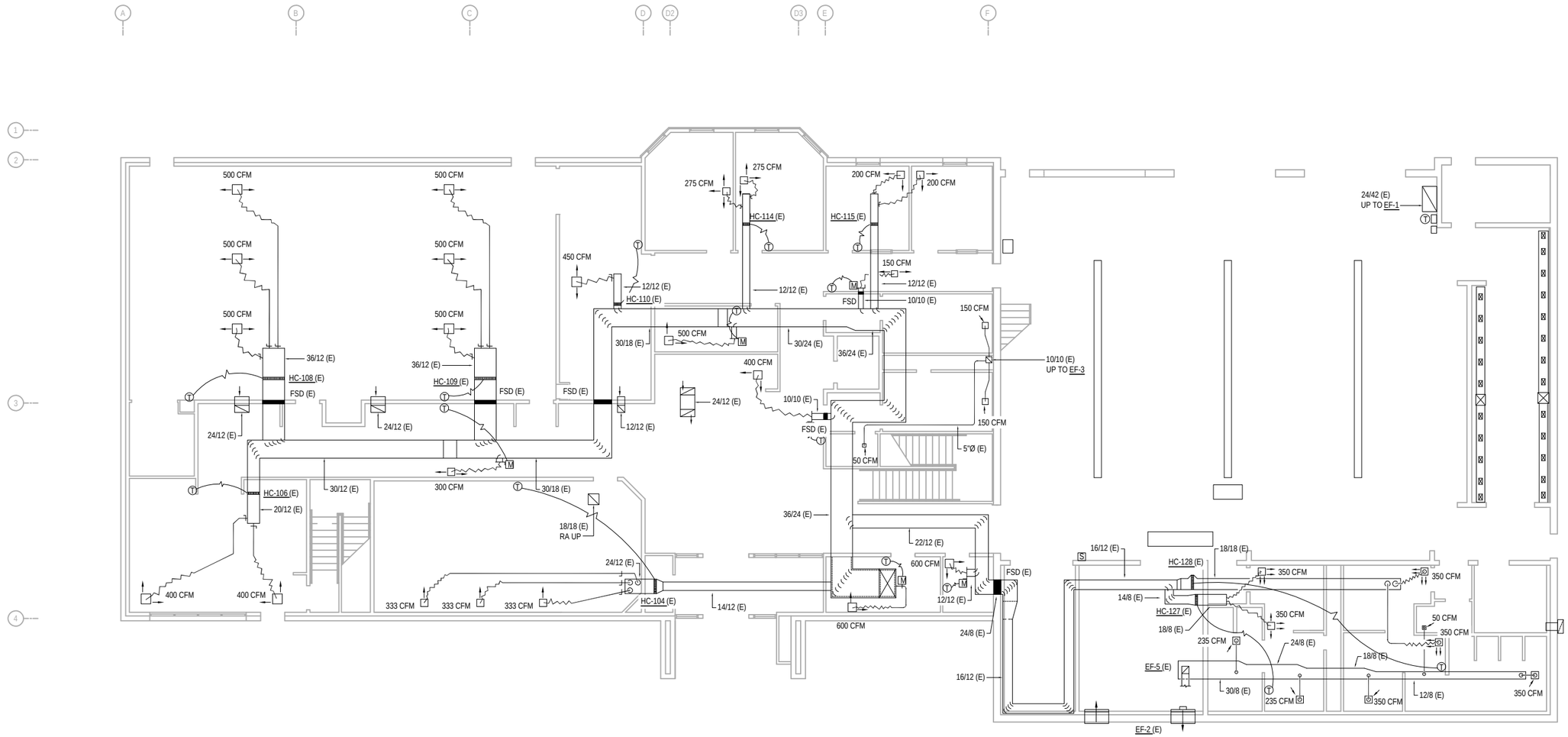

1 LOWER FLOOR VENTILATION PLAN

SCALE: 0 3' 12'
1" 6"

SHEET NOTES

1. EXISTING SYSTEMS SHOWN ON THE DRAWINGS ARE FROM RECORD DRAWINGS AND A NON-DESTRUCTIVE WALK THROUGH OF THE SPACE. ACTUAL SYSTEMS MAY VARY FROM THE INFORMATION INDICATED ON THE DRAWINGS. THE DRAWINGS MAY NOT SHOW ALL EXISTING SYSTEMS. CONTRACTOR TO FIELD VERIFY EXISTING CONDITIONS, LOCATIONS, SERVICE, AND SIZES BEFORE START OF WORK.
2. COORDINATE WITH BUILDING OWNER FOR ALL WORK TAKING PLACE IN OCCUPIED TENANT SPACES AND FOR WORK REQUIRING SHUT DOWN OF BUILDING SYSTEMS.
3. RE-BALANCE GRILLES AND DIFFUSERS TO THE VALUES INDICATED ON THE DRAWINGS.
4. CLEAN VENTILATION SYSTEMS PER SPECIFICATIONS.

K+A designstudios
ARCHITECTURE + PLANNING
130 TRADING BAY RD SUITE 330 KENAI, ALASKA 99611
T: 907.283.0880 WWW.KA-DESIGNSTUDIOS.COM

T3 ALASKA LLC
Mechanical & Electrical Engineering
301 Calista Court, Suite 100
Anchorage, Alaska 99518
Ph: 907-865-7900 AEL L 1625

Morrison Maierle
engineers · surveyors · planners · scientists

ALASKA REGIONAL FIRE TRAINING CENTER BUILDING REHABILITAION

BID DOCUMENTS
KENAI, ALASKA

Revisions:

STATE OF ALASKA
49 TH
ALEC C. THOMSON
ME-9694
07/31/19
REGISTERED PROFESSIONAL ENGINEER

Date: JULY 31, 2019
Drawn: STH
Checked: ACT
Project: 2019.053.0
File Name: 19053–M21

Sheet Title:
LOWER FLOOR VENTILATION PLAN

Sheet:
M2.1

© Copyright T3 Alaska, LLC

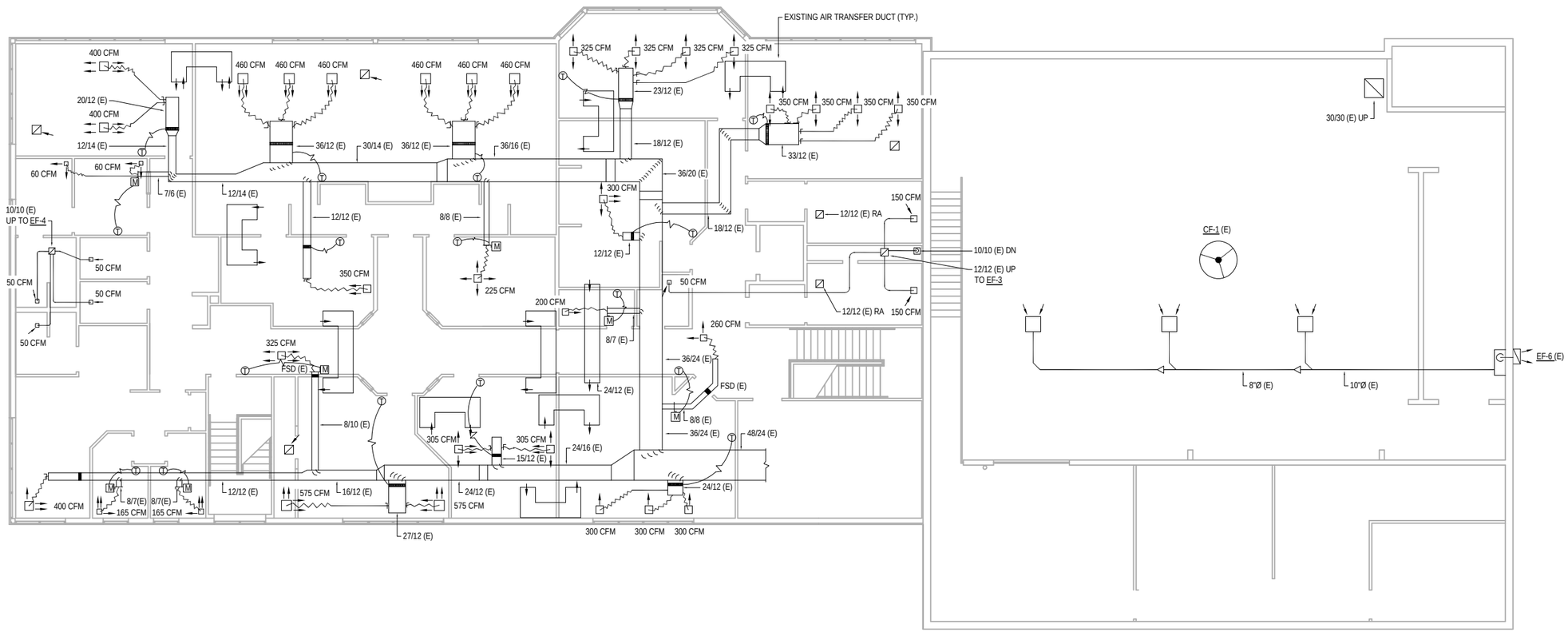

1 UPPER FLOOR EXISTING VENTILATION PLAN

SCALE: 0 3' 12'
1' 6'

SHEET NOTES

1. EXISTING SYSTEMS SHOWN ON THE DRAWINGS ARE FROM RECORD DRAWINGS AND A NON-DESTRUCTIVE WALK THROUGH OF THE SPACE. ACTUAL SYSTEMS MAY VARY FROM THE INFORMATION INDICATED ON THE DRAWINGS. THE DRAWINGS MAY NOT SHOW ALL EXISTING SYSTEMS. CONTRACTOR TO FIELD VERIFY EXISTING CONDITIONS, LOCATIONS, SERVICE, AND SIZES BEFORE START OF WORK.
2. COORDINATE WITH BUILDING OWNER FOR ALL WORK TAKING PLACE IN OCCUPIED TENANT SPACES AND FOR WORK REQUIRING SHUT DOWN OF BUILDING SYSTEMS.
3. RE-BALANCE GRILLES AND DIFFUSERS TO THE VALUES INDICATED ON THE DRAWINGS .
4. CLEAN VENTILATION SYSTEMS PER SPECIFICATIONS.

K+A designstudios
ARCHITECTURE + PLANNING
130 TRADING BAY RD SUITE 330 KENAI, ALASKA 99611
T: 907.283.0880 WWW.KA-DESIGNSTUDIOS.COM

T3 ALASKA
301 Calista Court, Suite 100
Anchorage, Alaska 99518
Ph: 907-865-7900 AEC L 1625
Mechanical & Electrical Engineering

Morrison Maierle
engineers · surveyors · planners · scientists

ALASKA REGIONAL FIRE TRAINING CENTER BUILDING REHABILITAION

BID DOCUMENTS
KENAI, ALASKA

Revisions:

STATE OF ALASKA 49TH
ALEC C. THOMSON
ME-8694
07/31/19
REGISTERED PROFESSIONAL ENGINEER

Date: JULY 31, 2019
Drawn: STH
Checked: ACT
Project: 2019.053.0
File Name: 19053–M22

Sheet Title:
UPPER FLOOR EXISTING VENTILATION PLAN

Sheet:
M2.2

© Copyright T3 Alaska, LLC

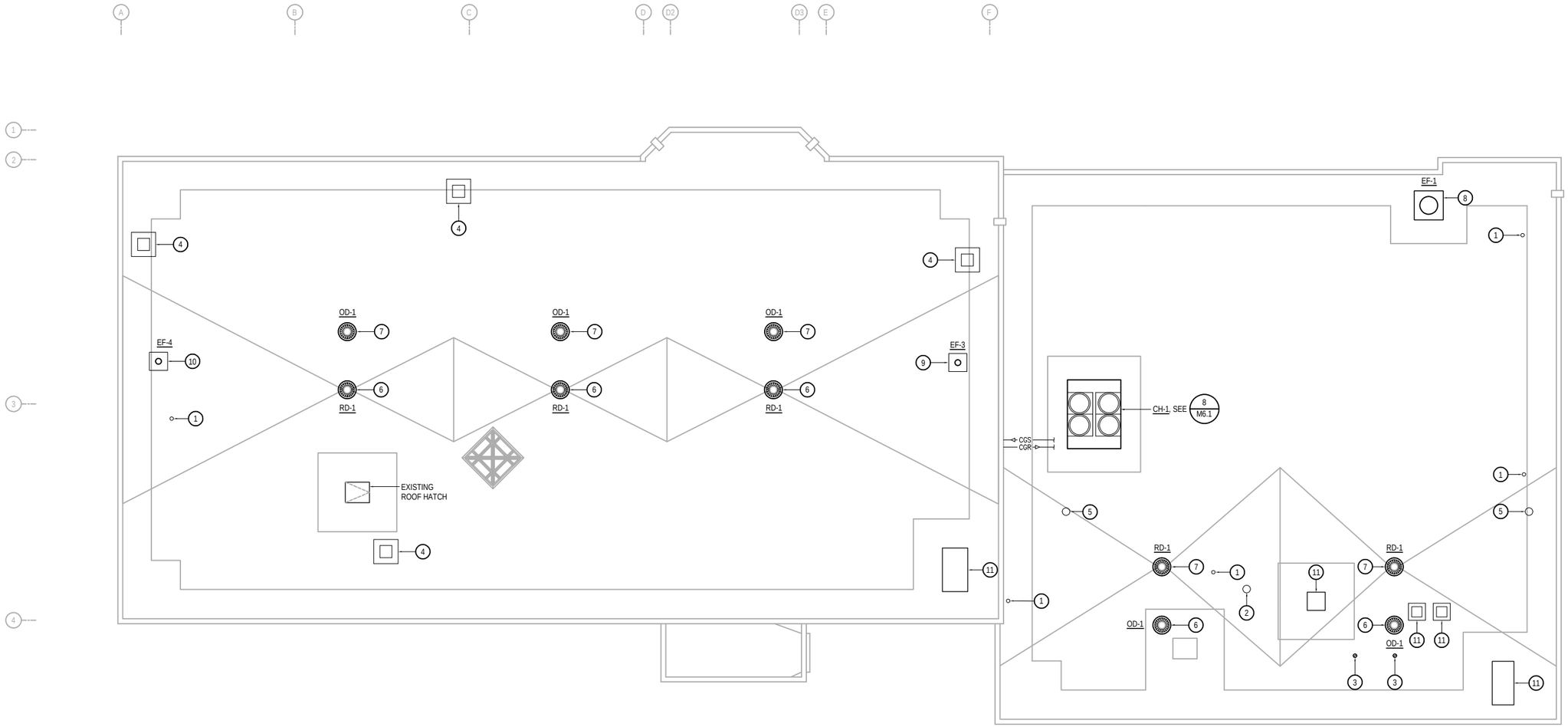

1 MECHANICAL ROOF PLAN

SCALE: 0 3' 12'
1' 6'

SHEET NOTES

1. EXISTING SYSTEMS SHOWN ON THE DRAWINGS ARE FROM RECORD DRAWINGS AND A NON-DESTRUCTIVE WALK THROUGH OF THE SPACE. ACTUAL SYSTEMS MAY VARY FROM THE INFORMATION INDICATED ON THE DRAWINGS. THE DRAWINGS MAY NOT SHOW ALL EXISTING SYSTEMS. CONTRACTOR TO FIELD VERIFY EXISTING CONDITIONS, LOCATIONS, SERVICE, AND SIZES BEFORE START OF WORK.
2. COORDINATE WITH BUILDING OWNER FOR ALL WORK TAKING PLACE IN OCCUPIED TENANT SPACES AND FOR WORK REQUIRING SHUT DOWN OF BUILDING SYSTEMS.

KEY NOTES

1. EXISTING VENT THROUGH ROOF TO REMAIN AND EXTEND AS REQUIRED. FOR INSTALLATION REQUIREMENTS WITH RE-ROOF WORK SEE 1/M6.1 AND ARCHITECTURAL.
2. EXISTING FLUE TO REMAIN. SEE 6/M6.1. FOR INSTALLATION REQUIREMENTS WITH RE-ROOF SEE ARCHITECTURAL.
3. INSTALL 6"Ø BOILER FLUE. SEE 7/M6.1.
4. EXISTING RELIEF HOOD ASSEMBLY ON EXISTING ROOF CURB. MAINTAIN AND PROTECT DURING RE-ROOF. SEE 4/M6.1. MODIFY EXISTING DUCT AS REQUIRED FOR RE-INSTALLATION OF EXISTING RELIEF HOOD WITH RE-ROOF. COORDINATE WITH ARCHITECTURAL.
5. 10"Ø VENT FOR EXISTING GAS-FIRED UNIT HEATER. SEE 5/M6.1.
6. REMOVE EXISTING ROOF DRAIN. INSTALL RD-1. SEE 2/M6.1. MODIFY EXISTING RAIN LEADER PIPING AS REQUIRED FOR INSTALLATION OF RD-1 WITH RE-ROOF. COORDINATE WITH ARCHITECTURAL.
7. REMOVE EXISTING OVERFLOW DRAIN. INSTALL OD-1. SEE 2/M6.1. MODIFY EXISTING RAIN LEADER PIPING AS REQUIRED FOR INSTALLATION OF OD-1 WITH RE-ROOF. COORDINATE WITH ARCHITECTURAL.
8. REMOVE EXISTING EXHAUST FAN. INSTALL EF-1. SEE 3/M6.1. MODIFY EXISTING DUCT AS REQUIRED FOR INSTALLATION OF EF-1 WITH RE-ROOF. COORDINATE WITH ARCHITECTURAL.
9. REMOVE EXISTING EXHAUST FAN. INSTALL EF-3. SEE 3/M6.1. MODIFY EXISTING DUCT AS REQUIRED FOR INSTALLATION OF EF-3 WITH RE-ROOF. COORDINATE WITH ARCHITECTURAL.
10. REMOVE EXISTING EXHAUST FAN. INSTALL EF-4. SEE 3/M6.1. MODIFY EXISTING DUCT AS REQUIRED FOR INSTALLATION OF EF-4 WITH RE-ROOF. COORDINATE WITH ARCHITECTURAL.
11. EXISTING HOOD ASSEMBLY ON EXISTING ROOF CURB. MAINTAIN AND PROTECT DURING RE-ROOF. SEE 4/M6.1, SIMILAR. MODIFY EXISTING DUCT AS REQUIRED FOR RE-INSTALLATION OF EXISTING HOOD WITH RE-ROOF. COORDINATE WITH ARCHITECTURAL.

K+A designstudios
ARCHITECTURE + PLANNING
130 TRADING BAY RD SUITE 330 KENAI, ALASKA 99611
T: 907.283.0880 WWW.KA-DESIGNSTUDIOS.COM

T3 ALASKA LLC
Mechanical & Electrical Engineering
301 Calista Court, Suite 100
Anchorage, Alaska 99518
Ph: 907-865-7900 AEL L 1625

Morrison Maierle
engineers · surveyors · planners · scientists

ALASKA REGIONAL FIRE TRAINING CENTER BUILDING REHABILITAION

BID DOCUMENTS
KENAI, ALASKA

Revisions:

STATE OF ALASKA
49 TH
ALEC C. THOMSON
ME-8694
07/31/19
REGISTERED PROFESSIONAL ENGINEER

Date:	JULY 31, 2019
Drawn:	STH
Checked:	ACT
Project:	2019.053.0
File Name:	19053–M31

Sheet Title:
MECHANICAL ROOF PLAN

Sheet:
M3.1

© Copyright T3 Alaska, LLC

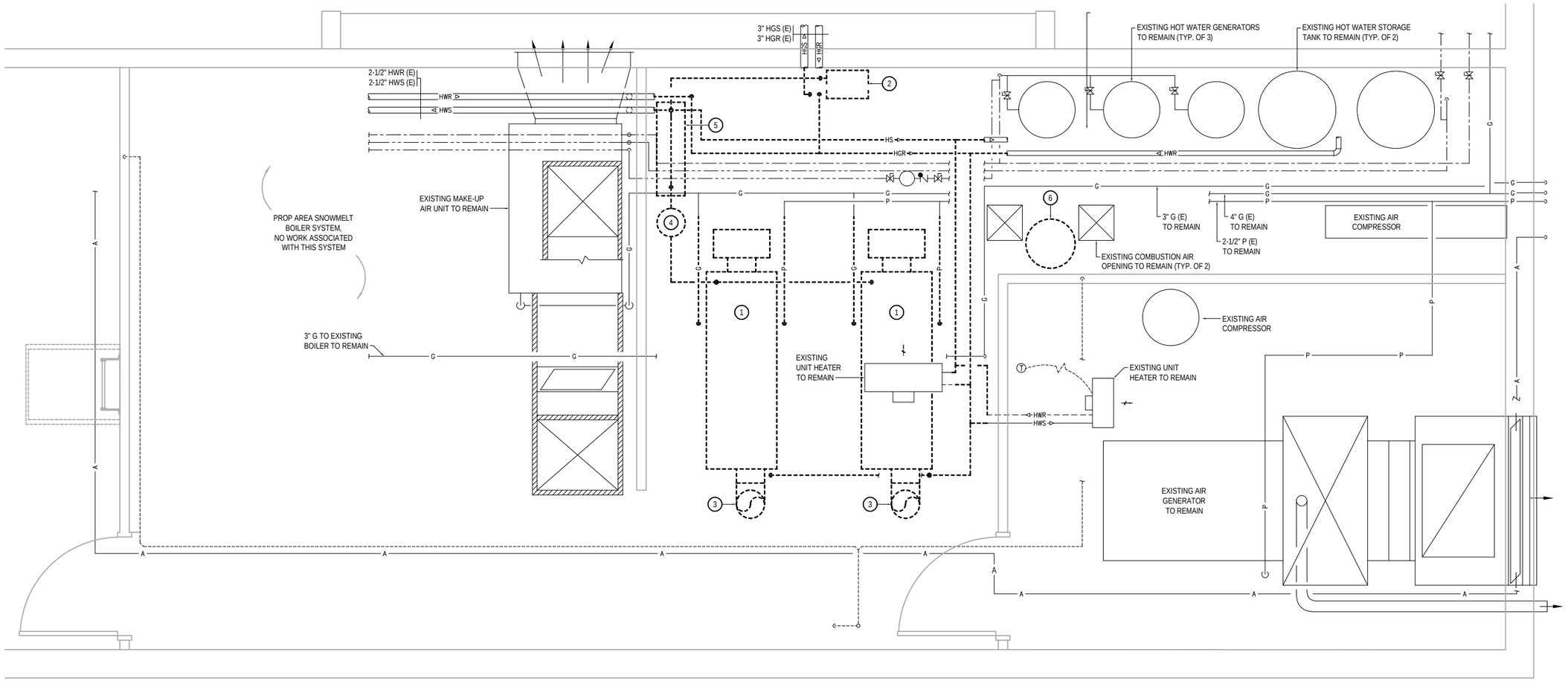

1 BOILER ROOM DEMOLITION PLAN

SCALE: 01" 6" 1' 2' 3'
3" 9"

SHEET NOTES

1. EXISTING SYSTEMS SHOWN ON THE DRAWINGS ARE FROM RECORD DRAWINGS AND A NON-DESTRUCTIVE WALK THROUGH OF THE SPACE. ACTUAL SYSTEMS MAY VARY FROM THE INFORMATION INDICATED ON THE DRAWINGS. THE DRAWINGS MAY NOT SHOW ALL EXISTING SYSTEMS. CONTRACTOR TO FIELD VERIFY EXISTING CONDITIONS, LOCATIONS, SERVICE, AND SIZES BEFORE START OF WORK.
2. COORDINATE WITH BUILDING OWNER FOR ALL WORK TAKING PLACE IN OCCUPIED TENANT SPACES AND FOR WORK REQUIRING SHUT DOWN OF BUILDING SYSTEMS.

KEY NOTES

1. REMOVE EXISTING BUILDING HEAT BOILERS, AND ASSOCIATED PUMPS AND PIPING AS REQUIRED FOR INSTALLATION OF BUILDING HEAT BOILERS, B-1 AND B-2, AS SHOWN ON REMODEL PLAN, 1/M4.2.
2. REMOVE EXISTING HEAT EXCHANGER, AND ASSOCIATED PUMPS AND PIPING AS REQUIRED FOR INSTALLATION OF HEAT EXCHANGER, HE-1, AS SHOWN ON REMODEL PLAN, 1/M4.2.
3. REMOVE EXISTING 10"Ø BOILER FLUE.
4. REMOVE EXISTING AIR SEPARATOR.
5. REMOVE EXISTING CIRCULATION PUMPS.
6. REMOVE EXISTING GLYCOL TANK.

K+A designstudios
ARCHITECTURE + PLANNING
130 TRADING BAY RD SUITE 330 KENAI, ALASKA 99611
T: 907.283.0880 WWW.KA-DESIGNSTUDIOS.COM

T3 ALASKA LLC
301 Calista Court, Suite 100
Anchorage, Alaska 99518
Ph: 907-865-7900 AEL L 1625
Mechanical & Electrical Engineering

Morrison Maierle
engineers · surveyors · planners · scientists

ALASKA REGIONAL FIRE TRAINING CENTER BUILDING REHABILITAION

BID DOCUMENTS
KENAI, ALASKA

Revisions:

STATE OF ALASKA 49TH
ALEC C. THOMSON
ME-8694
REGISTERED PROFESSIONAL ENGINEER
07/31/19

Date: JULY 31, 2019
Drawn: STH
Checked: ACT
Project: 2019.053.0
File Name: 19053–M41

Sheet Title:
BOILER ROOM DEMOLITION PLAN

Sheet:
M4.1

© Copyright T3 Alaska, LLC

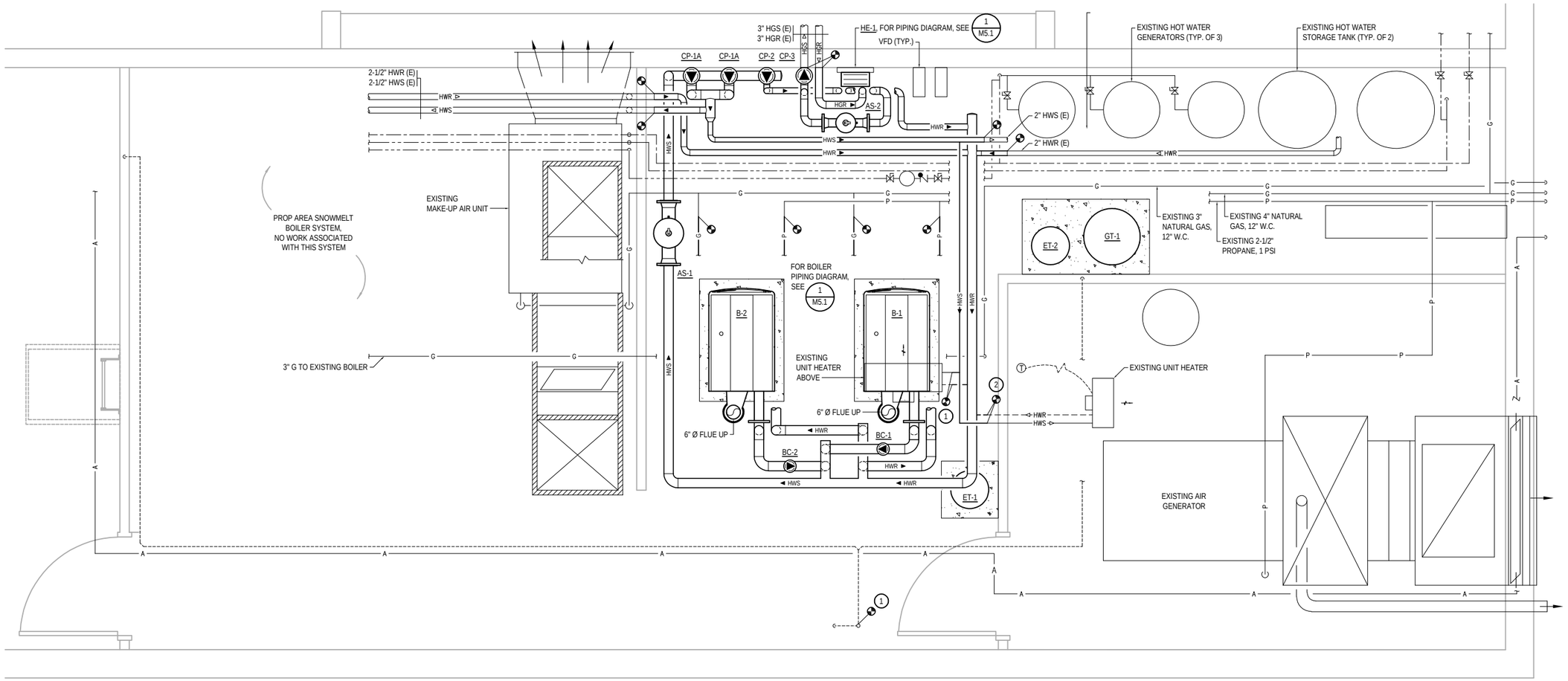

1 BOILER ROOM REMODEL PLAN

SCALE: 0 1" 6" 1' 2' 3' / 3" 9"

SHEET NOTES

1. EXISTING SYSTEMS SHOWN ON THE DRAWINGS ARE FROM RECORD DRAWINGS AND A NON-DESTRUCTIVE WALK THROUGH OF THE SPACE. ACTUAL SYSTEMS MAY VARY FROM THE INFORMATION INDICATED ON THE DRAWINGS. THE DRAWINGS MAY NOT SHOW ALL EXISTING SYSTEMS. CONTRACTOR TO FIELD VERIFY EXISTING CONDITIONS, LOCATIONS, SERVICE, AND SIZES BEFORE START OF WORK.
2. COORDINATE WITH BUILDING OWNER FOR ALL WORK TAKING PLACE IN OCCUPIED TENANT SPACES AND FOR WORK REQUIRING SHUT DOWN OF BUILDING SYSTEMS.

KEY NOTES

1. CONNECT 1" HEATING WATER SUPPLY AND RETURN TO EXISTING 1" HEATING WATER SUPPLY AND RETURN SERVING EXISTING UNIT HEATER.
2. CONNECT 1/2" HEATING WATER SUPPLY AND RETURN TO EXISTING 1/2" HEATING WATER SUPPLY AND RETURN SERVING EXISTING UNIT HEATER.

K+A designstudios
ARCHITECTURE + PLANNING
130 TRADING BAY RD SUITE 330 KENAI, ALASKA 99611
T: 907.283.0880 WWW.KA-DESIGNSTUDIOS.COM

T3 ALASKA LLC
Mechanical & Electrical Engineering
301 Calista Court, Suite 100
Anchorage, Alaska 99518
Ph: 907-865-7900 AEL L 1625

Morrison Maierle
engineers · surveyors · planners · scientists

ALASKA REGIONAL FIRE TRAINING CENTER BUILDING REHABILITAION

BID DOCUMENTS
KENAI, ALASKA

Revisions:

STATE OF ALASKA 49TH
ALEC C. THOMSON
ME-8694
REGISTERED PROFESSIONAL ENGINEER
07/31/19

Date: JULY 31, 2019
Drawn: STH
Checked: ACT
Project: 2019.053.0
File Name: 19053–M42

Sheet Title:
BOILER ROOM REMODEL PLAN

Sheet:
M4.2

© Copyright T3 Alaska, LLC

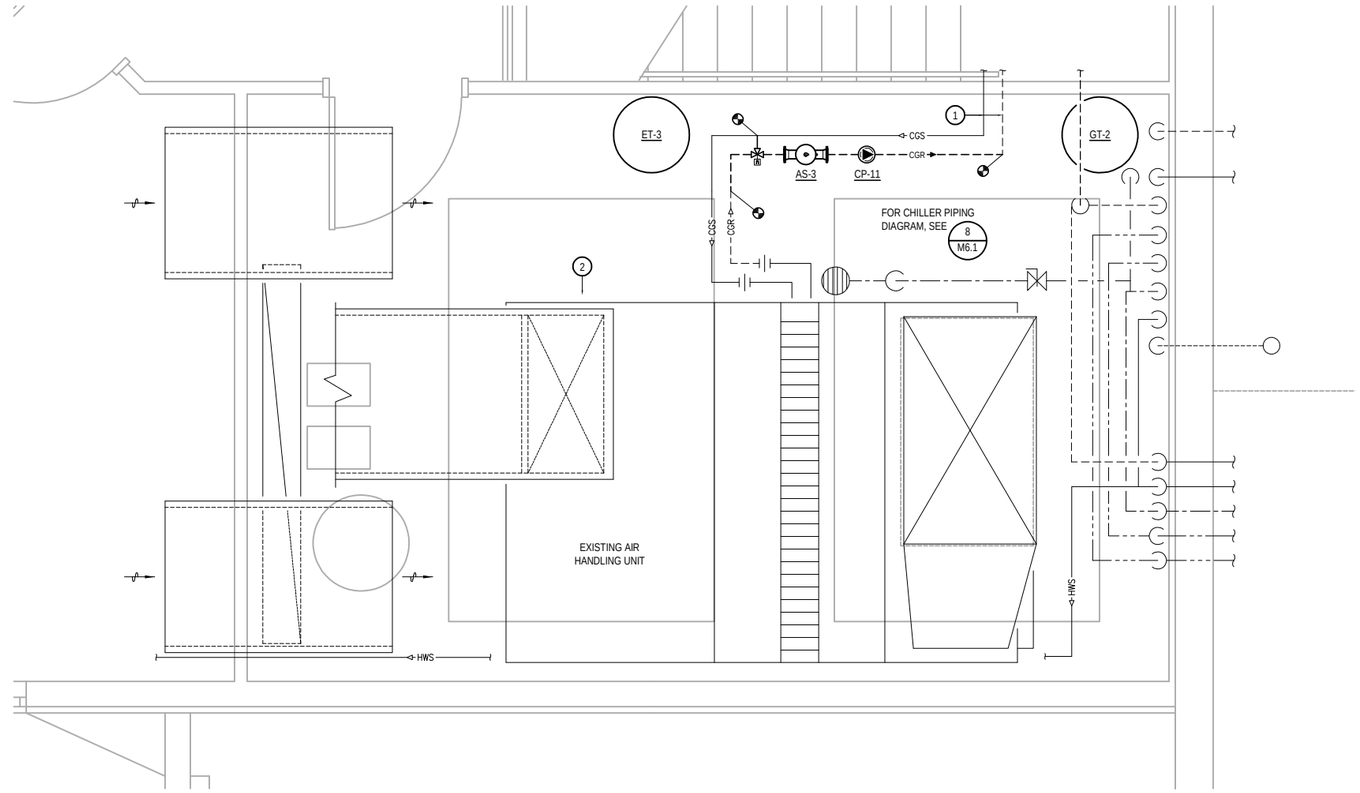

1 AIR HANDLING UNIT ROOM PLAN

SCALE: 01" 6" 1' 2' 3'
3" 9"

SHEET NOTES

1. EXISTING SYSTEMS SHOWN ON THE DRAWINGS ARE FROM RECORD DRAWINGS AND A NON-DESTRUCTIVE WALK THROUGH OF THE SPACE. ACTUAL SYSTEMS MAY VARY FROM THE INFORMATION INDICATED ON THE DRAWINGS. THE DRAWINGS MAY NOT SHOW ALL EXISTING SYSTEMS. CONTRACTOR TO FIELD VERIFY EXISTING CONDITIONS, LOCATIONS, SERVICE, AND SIZES BEFORE START OF WORK.
2. COORDINATE WITH BUILDING OWNER FOR ALL WORK TAKING PLACE IN OCCUPIED TENANT SPACES AND FOR WORK REQUIRING SHUT DOWN OF BUILDING SYSTEMS.

KEY NOTES

1. EXISTING 3" CHILLER GLYCOL SUPPLY AND RETURN SERVING CH-1 ON ROOF, SEE 1/M3.1 FOR LOCATION. DRAIN, FLUSH AND CLEAN EXISTING CHILLER PIPING AND COILS BEFORE FILLING SYSTEM WITH NEW 40% PROPYLENE GLYCOL SOLUTION.
2. REPLACE BEARING OF FAN SHAFT.

K+A designstudios
ARCHITECTURE + PLANNING
130 TRADING BAY RD SUITE 330 KENAI, ALASKA 99611
T: 907.283.0880 WWW.KA-DESIGNSTUDIOS.COM

T3 ALASKA LLC
Mechanical & Electrical Engineering
301 Calista Court, Suite 100
Anchorage, Alaska 99518
Ph: 907-865-7900 AEL L 1625

Morrison Maierle
engineers · surveyors · planners · scientists

ALASKA REGIONAL FIRE TRAINING CENTER BUILDING REHABILITAION

BID DOCUMENTS
KENAI, ALASKA

Revisions:

STATE OF ALASKA 49TH
ALEC C. THOMSON
ME-8694
07/31/19
REGISTERED PROFESSIONAL ENGINEER

Date: JULY 31, 2019
Drawn: STH
Checked: ACT
Project: 2019.053.0
File Name: 19053-M43

Sheet Title:
AIR HANDLING UNIT ROOM PLAN

Sheet:
M4.3

© Copyright T3 Alaska, LLC

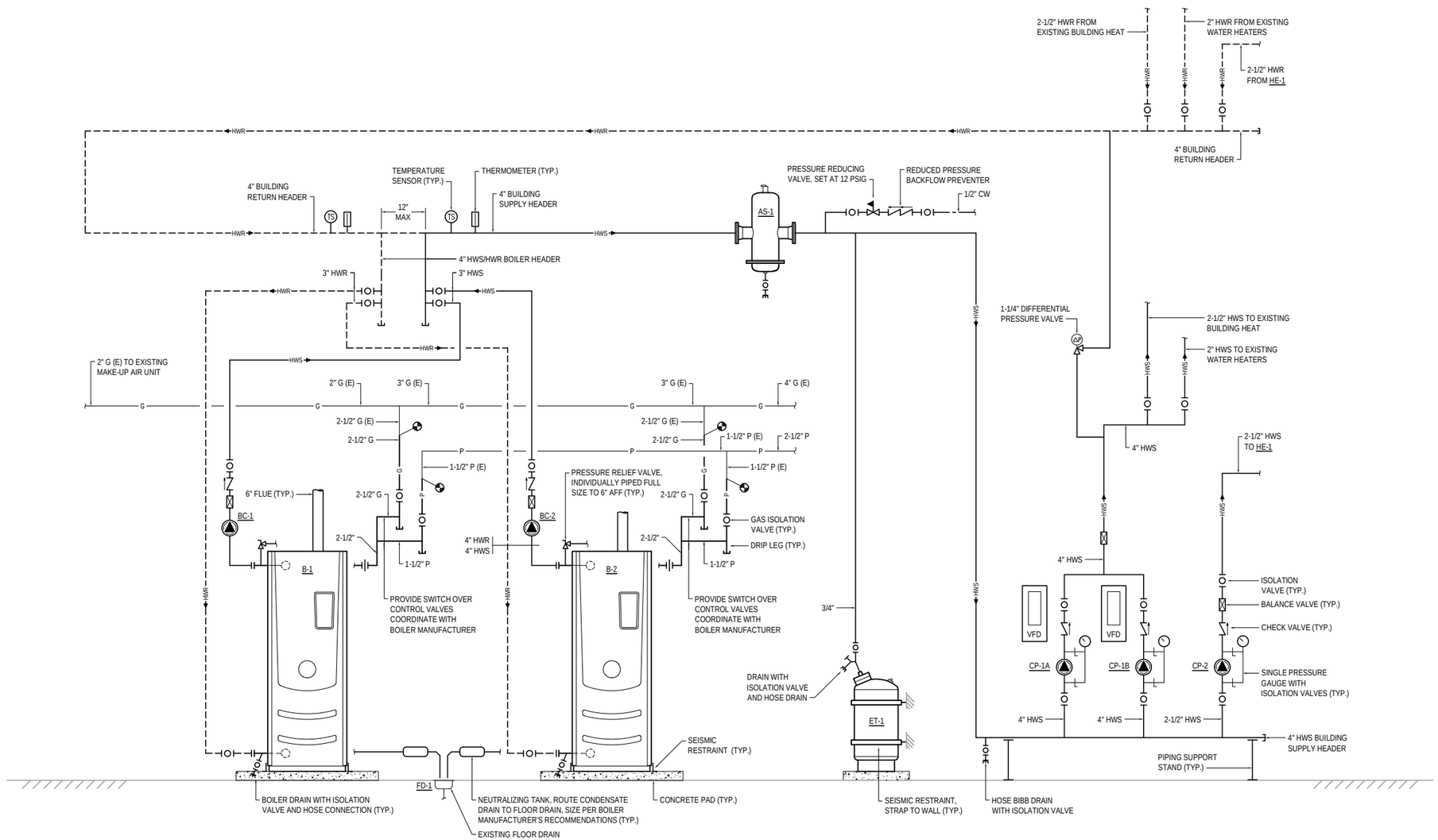

1 BOILER ROOM PIPING DIAGRAM

SCALE: NONE

K+A designstudios
ARCHITECTURE + PLANNING
130 TRADING BAY RD SUITE 330 KENAI, ALASKA 99611
T: 907.283.0880 WWW.KA-DESIGNSTUDIOS.COM

T3 ALASKA
Mechanical & Electrical Engineering
301 Calista Court, Suite 100
Anchorage, Alaska 99518
Ph: 907-865-7900 AEL L 1625

Morrison Maierle
engineers · surveyors · planners · scientists

ALASKA REGIONAL FIRE TRAINING CENTER BUILDING REHABILITAION

BID DOCUMENTS

KENAI, ALASKA

Revisions:

STATE OF ALASKA 49TH ALEC C. THOMSON ME-8694 07/31/19 REGISTERED PROFESSIONAL ENGINEER

Date: JULY 31, 2019

Drawn: STH

Checked: ACT

Project: 2019.053.0

File Name: 19053–M51

Sheet Title:

BOILER ROOM PIPING DIAGRAM

Sheet:

M5.1

12 of 15M

© Copyright T3 Alaska, LLC

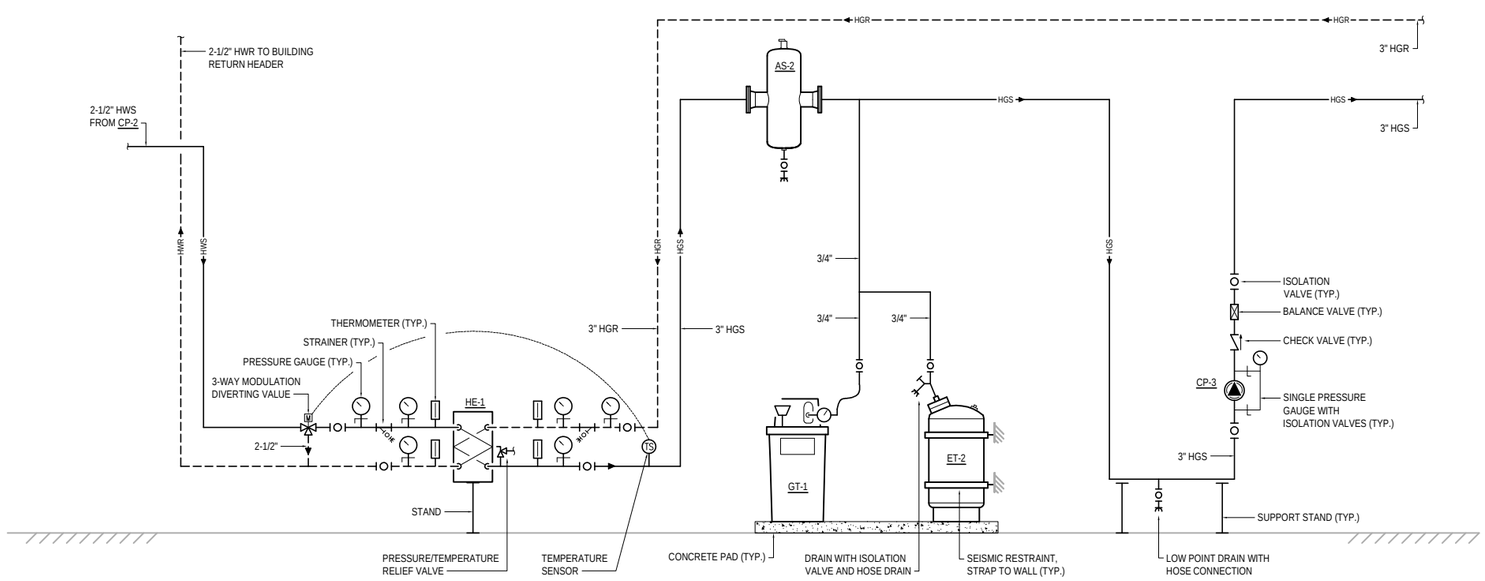

1 HEAT EXCHANGER PIPING DIAGRAM

SCALE: NONE

K+A designstudios
ARCHITECTURE + PLANNING
130 TRADING BAY RD SUITE 330 KENAI, ALASKA 99611
T: 907.283.0880 WWW.KA-DESIGNSTUDIOS.COM

T3 ALASKA
Mechanical & Electrical Engineering
301 Calista Court, Suite 100
Anchorage, Alaska 99518
Ph: 907-865-7900 AECL: 1625

Morrison Maierle
engineers · surveyors · planners · scientists

ALASKA REGIONAL FIRE TRAINING CENTER BUILDING REHABILITAION

BID DOCUMENTS

KENAI, ALASKA

Revisions:

STATE OF ALASKA 49TH
ALEC C. THOMSON
ME-8694
07/31/19
REGISTERED PROFESSIONAL ENGINEER

Date: JULY 31, 2019
Drawn: STH
Checked: ACT
Project: 2019.053.0
File Name: 19053–M51

Sheet Title:
MECHANICAL DIAGRAMS

Sheet:
M5.2

© Copyright T3 Alaska, LLC

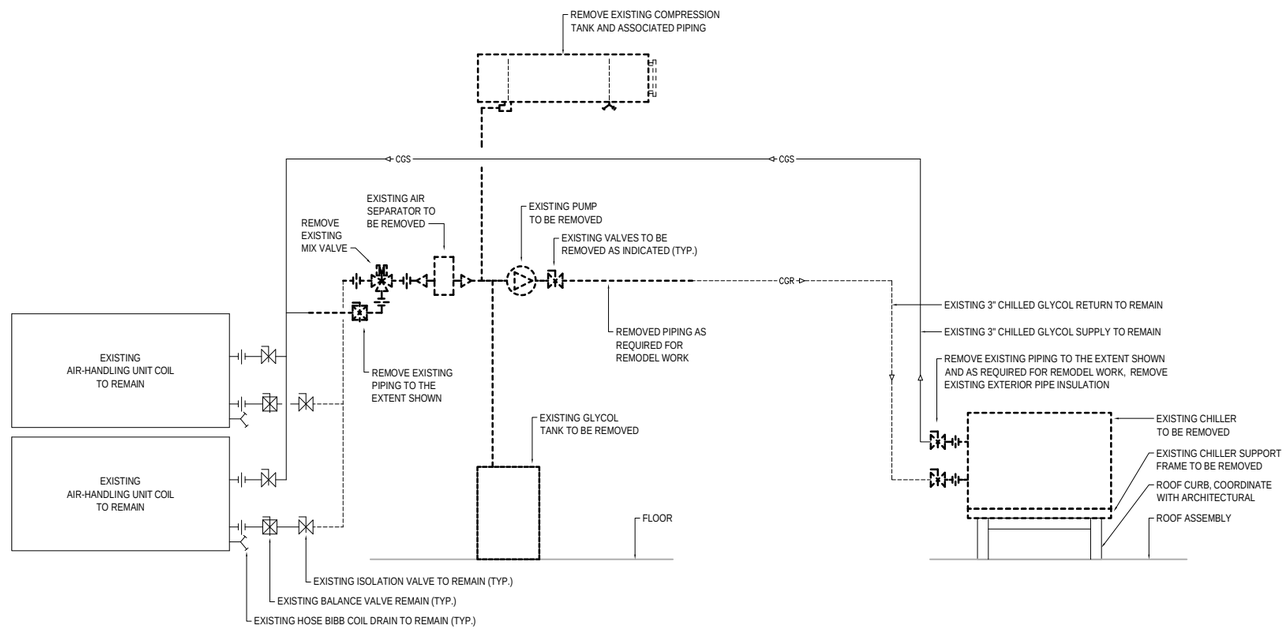

1 CHILLER SYSTEM PIPING DEMOLITION DIAGRAM

SCALE: NONE

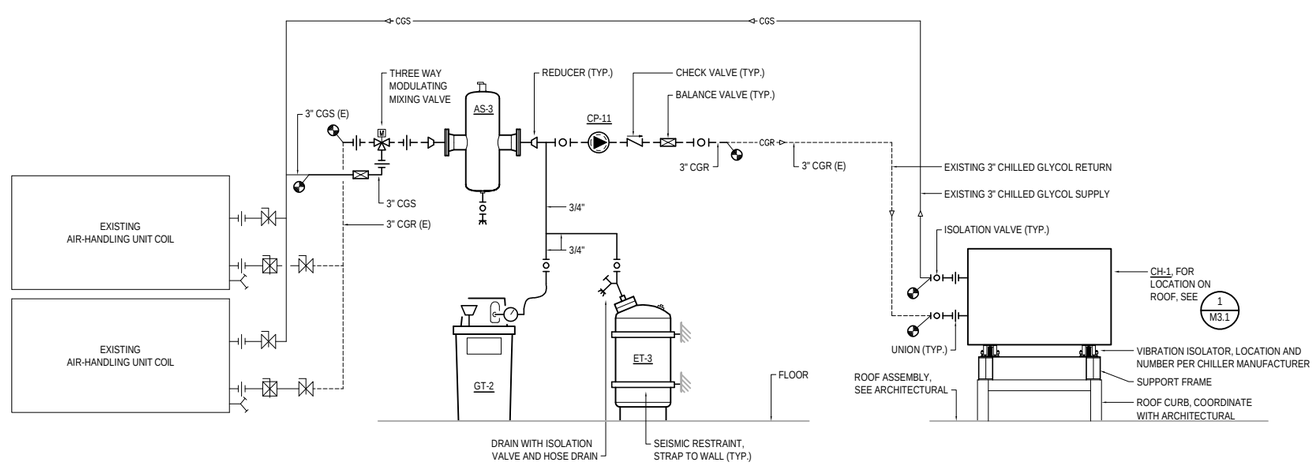

2 CHILLER SYSTEM PIPING REMODEL DIAGRAM

SCALE: NONE

SHEET NOTES

1. EXISTING SYSTEMS SHOWN ON THE DRAWINGS ARE FROM RECORD DRAWINGS AND A NON-DESTRUCTIVE WALK THROUGH OF THE SPACE. ACTUAL SYSTEMS MAY VARY FROM THE INFORMATION INDICATED ON THE DRAWINGS. THE DRAWINGS MAY NOT SHOW ALL EXISTING SYSTEMS. CONTRACTOR TO FIELD VERIFY EXISTING CONDITIONS, LOCATIONS, SERVICE, AND SIZES BEFORE START OF WORK.
2. COORDINATE WITH BUILDING OWNER FOR ALL WORK TAKING PLACE IN OCCUPIED TENANT SPACES AND FOR WORK REQUIRING SHUT DOWN OF BUILDING SYSTEMS.
3. DRAIN EXISTING GLYCOL AND DISPOSE. FLUSH AND CLEAN CHILLED WATER PIPING AND COILS. REFILL WITH 40% PROPYLENE GLYCOL.

K+A designstudios
ARCHITECTURE + PLANNING
130 TRADING BAY RD SUITE 330 KENAI, ALASKA 99611
T: 907.283.0880 WWW.KA-DESIGNSTUDIOS.COM

T3 ALASKA
Mechanical & Electrical Engineering
301 Calista Court, Suite 100
Anchorage, Alaska 99518
Ph: 907-865-7900 AECL 1625

Morrison Maierle
engineers · surveyors · planners · scientists

ALASKA REGIONAL FIRE TRAINING CENTER BUILDING REHABILITAION

BID DOCUMENTS

KENAI, ALASKA

Revisions:

STATE OF ALASKA 49TH
ALEC C. THOMSON
ME-8694
07/31/19
REGISTERED PROFESSIONAL ENGINEER

Date: JULY 31, 2019
Drawn: MSH
Checked: ACT
Project: 2019.053.0
File Name: 19053–M51

Sheet Title:
CHILLER PIPING SYSTEM

Sheet:
M5.3

© Copyright T3 Alaska, LLC

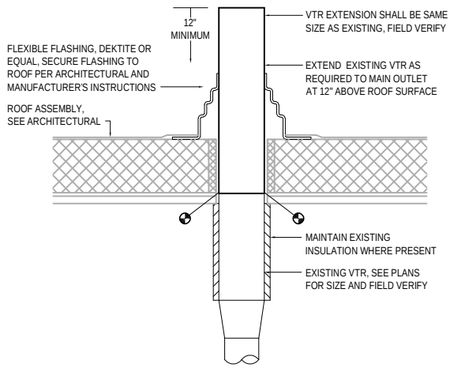

1 VENT THROUGH ROOF DETAIL
SCALE: NONE

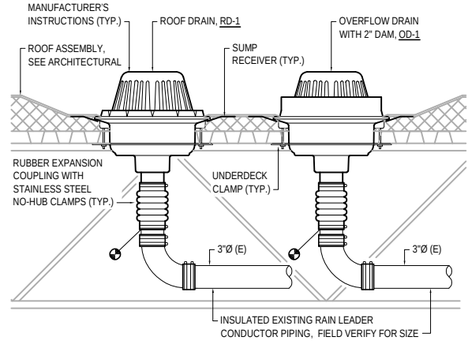

2 ROOF DRAIN DETAIL
SCALE: NONE

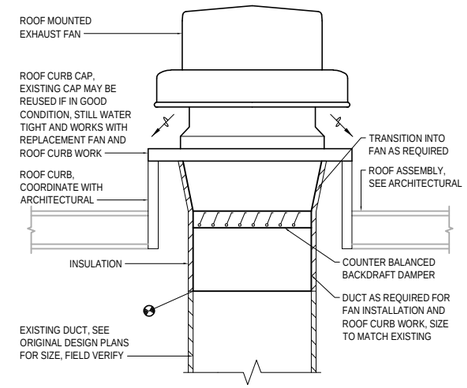

3 EXHAUST FAN DETAIL
SCALE: NONE

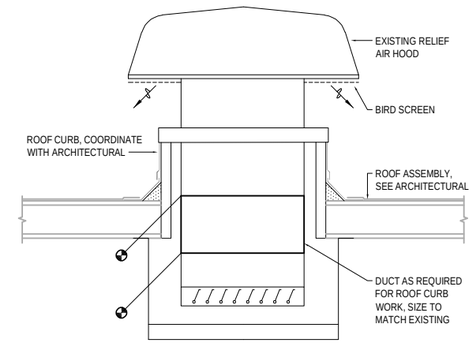

4 EXISTING RELIEF AIR DETAIL
SCALE: NONE

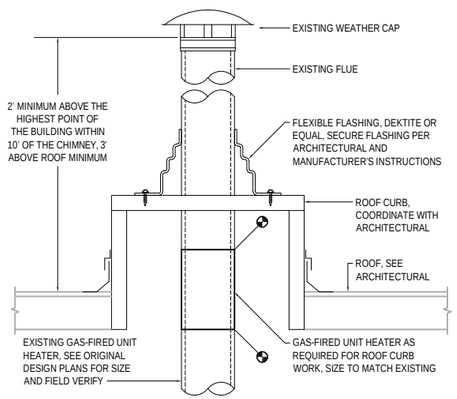

5 EXISTING FLUE PENETRATION DETAIL
SCALE: NONE

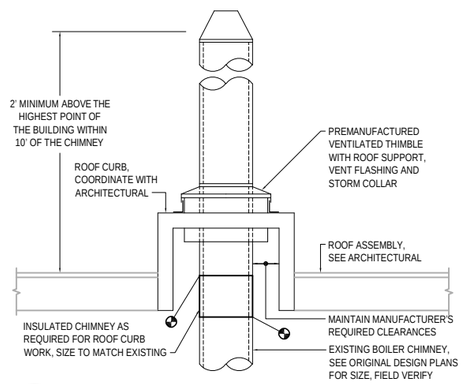

6 EXISTING FLUE PENETRATION DETAIL
SCALE: NONE

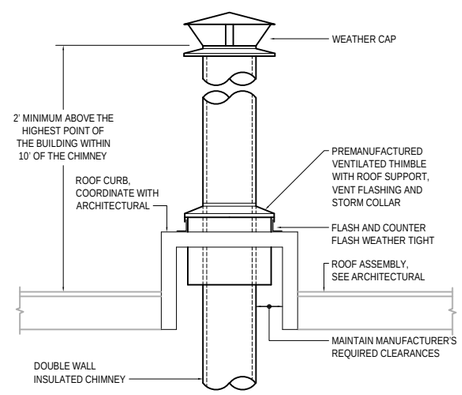

7 BOILER FLUE PENETRATION DETAIL
SCALE: NONE

K+A designstudios
ARCHITECTURE + PLANNING
130 TRADING BAY RD SUITE 330 KENAI, ALASKA 99611
T: 907.283.0880 WWW.KA-DESIGNSTUDIOS.COM
T3 ALASKA LLC
Mechanical & Electrical Engineering
301 Calista Court, Suite 100
Anchorage, Alaska 99518
Ph: 907-865-7900 AECL: L 1625
Morrison Maierle
engineers · surveyors · planners · scientists

ALASKA REGIONAL FIRE TRAINING CENTER BUILDING REHABILITAION

BID DOCUMENTS
KENAI, ALASKA

Revisions:

STATE OF ALASKA 49 TH
ALEC C. THOMSON
ME-8694
07/31/19
REGISTERED PROFESSIONAL ENGINEER

Date: JULY 31, 2019
Drawn: MSH
Checked: ACT
Project: 2019.053.0
File Name: 19053-M51

Sheet Title:
MECHANICAL DETAILS

Sheet:
M6.1

15 of 15M

© Copyright T3 Alaska, LLC

EQUIPMENT LIST

WC-1: Water Closet
Fixture: Wall mounted, wall-outlet, whirlpool flush, 1.5 gallons per flush, vitreous china, elongated bowl, 1-1/2 inch top spud connection, white finish, rim 15 inches above finished floor.
Crane, 1.5 Placidus 3-446E.
Flush Valve: Sloan Royal #111, 1.5 gallons per flush. No Substitutions.
Seat: Solid plastic, open front, extended back and check hinge.
Carrier: Floor mounted, adjustable height. J.R. Smith Series 0200 as required for installation with plumbing chases, and series 500 for stud walls.

WC-2: Water Closet, Handicapped
Fixture: Same as WC-1, except rim 17 inches above finished floor. Crane, 1.5 Placidus 3-446E.
Flush Valve: Sloan #111, 1.5 gallons per flush. No Substitutions.
Seat: Solid plastic, open front, extended back and check hinge.
Carrier: Floor mounted, adjustable height. J.R. Smith Series 0200 as required for installation with plumbing chases, and series 500 for stud walls.

UR: Urinal
Fixture: Vitreous china, wall hung, siphon jet urinal with integral trap, 1 gallon per flush, 3/4" top spud. Kohler Dexter K-5016-T.
Flush Valve: Sloan Royal #186-1. No Substitutions.
Carrier: J.R. Smith serise 637. Mounting height as shown on Architectural drawings.

MF: Mop Faucet.
Faucet: Fiat #830-AA service faucet with vacuum breaker, pail hook, wall support and rough chrome finish. Secure to wall at approximatly 48 inches above floor. Install in plumbing chase.

L-1: Lavatory
Fixture: Wall hung vitreous china 18"x15", with back splash, front overflow, soap depression. Crane 1-194.
Faucet: single lever control handle, deck mounted, 4" centerset. Delta 501WF, no substitutions.
Drain: Grid strainer.

L-2: Lavatory
Fixture: Counter top mounted, viteous china, self-rimming, oval basin, front overflow, 20"x17". Crane 1-287.
Faucet: Single lever control handle, deck mounted, 4" centerset. Delta 501WF, no substitutions.
Drain: Grid Strainer

MSB: Mop Service Basin
Fixture: One piece molded stone with slip resistant surface, Fiat Model MSB-2424 with #E-77-AA vinyl bumperguard, #889-CC mop hanger, and silicone sealant.
Faucet: Fiat #830-AA service faucet with vacuum breaker, pail hook, wall support, rough chrome finish and 3/4 inch hose thread on spout. Secure to wall at approximatly 36 inches above finished floor.
Strainer: Combination done strainer and lint basket, #302 stainless steel, 3 inch caulked outlet.

CS-1: Counter Sink
Fixture: Single bowl, 18 gauge stainless steel, self-rimming, 19"x21"OD, bowl 14"x18"x5" deep. Underside undercoated for sound deadening. Just SL-ADA-1921-AGR with offset waste.
Faucet: Single-handle deck mounted, with rigid/swing convertible, gooseneck spout, aerator and spray attachment. Delta 172-WF, no substitutions.
Strainer: Just J-35 crumb cup strainer, with a rubber stopper.

CS-2: Counter Sink
Fixture: Double compartment, 18 gauge type 304 stainless steel, bowls 14"x14"x6" deep. Overall 19"x33", entire underside shall be undercoated for sound deadening. Just DL-ADA-1933-AGR with offset waste.
Faucet: Single-handle deck mount, Delta faucet No. 172-WF, with rigid/swing convertible, gooseneck spout, aerator, and spray attachment.
Strainer: Just J-35 cup strainer, with rubber stopper.

LT-1: Laundry Tub
TUB: Wall mounted, molded stone, furnished with and supported by a mounting bracket of heavy gauge galvanized steel, secured to the wall with mechanical fasteners.
Outside dimensions 23"x21 1/2"x13 1/2". Plug strainer with stopper. Fiat L-1. Faucet Delta 175F.

SH-1: Shower
Enclosure: One piece acrylic institutional shower module. A seamless unit reinforced in the back with fiberglass reinforced polyester resin. Shower modules shall be pre-drilled and equipped with a model 180AA pressure balance, single dial lever mixing valve with stops. hand held shower head with swivel fitting, 69" flexible stainless steel hose and in-line vacuum breaker, 10 oz. GSA approved shower curtin with curtain hooks, 2" cast brass chome plated shower drain, and 1" diameter stainless steel curtain rod.
All units shall have anti-skid floor treatment to meet performance requirements of ASTM F-462-78.
Crane/Fiat MSI-321.

SH-2: Shower
Enclosure: One piece acrylic barrier-free shower module. A seamless unit reinforced in the back with fiberglass reinforced polyester resin. Module shall have a molded integral seat. Shower modules shall be pre-drilled and equiped with a model 180AA pressure balance, single dial lever mixing valve with stops. Hand-held shower head with swivel fitting, 69" flexible stainless steel hose and in-line vacuum breaker, 10 oz. GSA approved shower curtin with curtain hooks, 2" cast brass chome plated shower drain, and 1" diameter stainless steel curtain rod.
All units shall have anti-skid floor tratment to meet performance requirements of ASTM F-462-78.
Additional back reinforcments shall be suitable located to provide code complying strctural integrity for factory attaching of grab bars, curtain rod, and slide guide for hand held flexible hose shower head. Crane/Fiat MSH 312.

SH-3: Shower
See detail on M-7, shower/hose to be used for cleaning turn-out clothing. Each hose has an on/off ball valve and tempered water.

CW: Clothes Washer
Provide 3/4" hot and cold water valved hose connections. Provide a 3" drain standpipe for connection to waste piping. Coordinated actual connections with clothes washer to be supplied.

DF-2: Drinking Fountain.
Fixture: Barrier-Free and able-bodied drinking fountain, stainless steel construction, antisquirt bubbler with stream guard, automatic stream regulator, push button operated,
mounting plate, screwdriver stop. Haws model 1108.
Carrier: Support system capable of supporting unit and 250 additional pounds securely from wall structure.

EW: Eye Wash
Pedestal Eyewash with ABS Plastic Bowl, Haws #7261. Heads, twin soft-flo with soft PVC covered ABS plastic anti-surge heads in safety green. Dust covers over heads. Valve instant action, stay open chrome plated brass ball valve, activated by stainless steel push flag. Emergency sign. Stream control with dual automatic pressure compensation devices. Galvanized steel pipe with 9" diameter floor flange. Drain waste on floor.

SP-1: Sump Pump: Automatic on-off operation, cast-iron housing, top, impeller and base. 19 gpm at 15ft hd. 3/10 Hp, 8 amps, 120 V, 60 Hz. Grainger 2P549.

HB-1: Hose bibb, wall hydrant, Non-freeze type enclosed in a flush mounting wall box, chrome plated, hose thread spout, removeable key, vacuum breaker - back flow preventor, and self draining with hose left attached.

FD-1: Floor Drain Smith 2010-A, cast iron body, flashing collar, nickel bronze adjustable strainer head. Size as shown. Install with trap primer.

FD-2: Floor Drain Smith 2110, cast iron body, flashing collar, cast iron adjustable strainer head. Size as shown.

PLUMBING FIXTURE SCHEDULE

SYMBOL	FIXTURE	WASTE	VENT	HW	CW	REMARKS
WC-1	WATER CLOSET 1	3"	2"	--	1"	--
WC-2	WATER CLOSET 2	3"	2"	--	1"	HANDICAPPED
UR	URINAL	2"	1 1/2"	--	3/4"	WALL HUNG
MF	MOP FAUCET	--	--	1/2"	1/2"	INSTALLED IN PIPE CHASE
L-1	LAVATORY 1	1 1/2"	1 1/2"	1/2"	1/2"	WALL HUNG
L-2	LAVATORY 2	1 1/2"	1 1/2"	1/2"	1/2"	COUNTER MOUNTED
MSB	MOP SERVICE BASIN	3"	2"	1/2"	1/2"	--
CS-1	COUNTER SINK 1	1 1/2"	1 1/2"	1/2"	1/2"	SINGLE BOWL
CS-2	COUNTER SINK 2	1 1/2"	1 1/2"	1/2"	1/2"	DOUBLE BOWL
DF-2	DRINKING FOUNTAIN 2	1 1/2"	1 1/2"	--	1/2"	DOUBLE UNIT
HB-1	HOSE BIBB, WALL HYDRANT	--	--	--	3/4"	NON-FREEZE, SELF-DRAINING
FD-1	FLOOR DRAIN	2"	1 1/2"	--	--	--
FD-2	FLOOR DRAIN	2"	1 1/2"	--	--	--
RD	ROOF DRAIN	--	--	--	--	--
ORD	OVERFLOW ROOF DRAIN	--	--	--	--	--
TP	TRAP PRIMER	--	--	--	1/2"	SMITH 2699, FOR EACH FD-1
LT-1	LAUNDRY TUB	2"	1 1/2"	1/2"	1/2"	--
CW	CLOTHES WASHER	3"	2"	1"	1"	--

RD: Roof Drain, cast iron body with flashing clamp, wire mesh screen, sump receiver, and under deck clamp. Size as shown. Smith 1010-Y-RC.

ORD: Overflow Roof Drain, Same as roof drain.

Water Heaters: 80 gallon storage tank, Amtrol WH-10C-DV. 3 required, no substitutions.

Chiller: Furnish and install a McQuay SEASONPAK air cooled water chiller. Model ALR-035C, The unit shall have a capacity of 36 tons of refrigeration, cooling 95 gpm of water fromn 52°F to 42°F when operating in 90°F ambient air. The water pressure drop shall not exceed 20 feet of water. The unit shall operate on 480 volt, 60 Hertz, 30phase electrical service. Total unit power consumption shall not exceed 45 KW.
The chiller shall be completly factory assembled on a rugged channel steel base and be individually performance tested at full and part load conditions. The unit shall be leak tested and shipped with a full operating charge ofRefrigerant 22. Construction and ratings shall be in accordance with latest ARI Standard 590 and shall comply with ANSI/ASHREA 15 Safety Code, National Electric Code and ASME Code.

AH-1: Air Handler, PACE P-40, 21,700cfm at 2.5" SP across fan. 114" wide cabinet. Unit to include Mixing box section with top and end dampered openings. Vee filter section with 59 sq. ft. of Farr 30/30 2" thick filters. Coil section with a capacity to cool 21,7000cfm from 73°F to 55°F with a 40% propylen glycol solution entering at 42 °F and leaving at 52°F, maximum air pressure drop of 0.5"WC. Fan section with internal spring isolators, and the fan motor within cabinet. Fan motor 20 Hp, 480V, 3 phase, 60 Hz. Max glycol pressure drop in coil, 5ft. Pace, No Substitutions.

Make-Up Air Unit: 8200cfm @ 1/2" ESP, heating air from -30°F to 80°F. Unit with Vee Filter Section, Inlet damper section, Economizer burner "On-Off" inlet air temperature ductstat, low temperature control, a modulating space thermostat adjusts the burner flame to maintain a discharge air temperature to compenstate for changing building heat loss or heat gains. Rupp CFA-18, 5hp, 480V, 3ph, 60Hz. with 403 control system. 1 mil Btuh input.

CD: Ceiling Supply air Diffuser, Shoemaker MA series Modular Diffuser, modular core ceiling diffuser. Moveable cores to provide various air patterns. Provide with a recessed screwdriver operated Opposed Blade Damper. Size, air quantity, and direction of throw air as shown.

LG: Linear Grille, for use with BB-2. Shoemaker Linear series, all extruded aluminum construction 1/8" bars on 1/2" centers, blades parallel to long dimension. Shoemaker LSW-1/2-0" 4"x72"

FR-1: Floor Register, Shoemaker 350 series with volume damper.

SG-1: Supply Grille, double deflection, front blades vertical, rear blades horizontal. Shoemaker 900VH.

RG: Return or Exhaust Air Grille, Shoemaker 600 series, 1/2"x1/2"x1/2" aluminum Lattice with an extruded aluminum frame. With an opposed blade damper. Size and air quantity as shown.

SF-1: Supply Fan, direct drive, inline fan, 1425cfm @ 0.25"S.P. duct mounted, Bunker Locker ventilation. Penn SX95QA, 1/2Hp, 120v, 60Hz. Provide with wire mesh inlet guard on fan.

SF-2: Supply Fan, direct drive, in line fan 1800 cfm @ 0.25" SP, duct mounted, Bunker Locker ventilation. Penn SX105QA 3/4 Hp, 120V, 60 Hz. Provide wire mesh inlet gaurd on fan.

CF-1: Ceiling fan, Leader Edge M-72, 6ft dia., 220 watts, 120V, 60 Hz, with solid state variable speed controller.

EF-1: Exhaust Fan, 8200cfm at 0.375"S.P., roof mounted on a curb. Spun aluminum dome, belt drive. 1 1/2Hp, 480V, 3ph, 60 Hz. Interlock with Make-up air unit. Penn DX30B.

EF-2: Exhaust fan 4720cfm at 0.250"S.P. Direct drive, panel mounted with wire gaurd and motor mount. 20" fan dia. 1Hp, 480V, 3ph, 60Hz. Penn P200. Wall thermostat cycles fan on and opens dampers when the temperature rises.

EF-3: Exhaust fan for stacked restrooms, 700cfm @ 0.5"S.P. With variable speed controller, mounted under motor dome. direct drive. Penn AQ10L, 1/4Hp, 120V, 60Hz. Control from central time clock.

EF-4: Exhaust Fan, 200 cfm @ 0.25" WC, roof mounted, with variable speed controller monted under motor dome. Direct drive. Penn XR94L, 1/10 Hp, 120V, 60 Hz. Continuous operation. Control from central time clock.

EF-5: Exhaust Fan for showers and restrooms. 1210 cfm @ 0.5" SP, direct drive, in-line fan. Greenheck SQ-100-A. 1/4 Hp, 120V, 60 Hz. With spring vibration isolators mounted alongside of fan. Control from central time clock.

EF-6: Exhaust Fan for vehicle exhaust system to be sized by Nederman.

Louvers: Ruskin ELF 375D sizes as shown, and finish shall be clear anodized aluminum. With 1/2"x1/2" birdscreen on backside of louver.

FSD: Fire Smoke Damper, 3 hr rated, class II leakage, 120v electric operator, damper normally closed. Damper shall meeet U.L. Standard 555S, and bear the U.L. label. Provide with an electric fuse link to close damper at 165°F, damper to reset when cooled to 135°F. Ruskin FSD31 Model MP2781, provide with a factory supplied sleeve. Install in accordance with manufactures instructions.

CONT. ON M-2

LEGEND

- BALL VALVE
- BALANCING VALVE
- CHECK VALVE
- GAS SHUT-OFF VALVE
- PRV — PRESSURE RELIEF VALVE
- STRAINER WITH BALL VALVE
- UNION
- PRESSURE GAUGE WITH ISOLATION VALVE
- THERMOMETER
- CW — COLD WATER
- HW — HOT WATER
- HWC — HOT WATER CIRCULATION
- GS — GLYCOL SUPPLY
- GR — GLYCOL RETURN
- G — GAS (PROPANE)
- HS — HEATING SUPPLY
- HR — HEATING RETURN
- WASTE PIPING
- V — VENT PIPING
- RW — RAIN WATER
- FLOW DIRECTION ARROW
- MAV — MANUAL AIR VENT WITH ISOLALATION VALVE
- PIPE UP
- PIPE DOWN
- HB — HOSE BIBB
- FCO — FLOOR CLEANOUT
- MOTORIZED VALVE, 2-WAY
- VTR — VENT THROUGH ROOF
- MOTORIZED VALVE, 3-WAY
- SUPPLY DUCT BEHIND
- WR — WALL REGISTER
- CD — CEILING DIFFUSER
- SUPPLY DUCT SECTION
- RETURN OR EXHAUST DUCT SECTION
- TURNING VANES, IN ALL SQUARE ELBOWS
- FSD — FIRE SMOKE DAMPER
- MANUAL BUTTERFLY VOLUME DAMPER
- MOTORIZED DAMPER
- GRAVITY BACKDRAFT DAMPER
- CANVAS DUCT CONNECTION
- INSULATED FLEXIBLE DUCT
- SD — SMOKE DETECTOR
- T — THERMOSTAT ON WALL
- DUCT WITH 1 INCH FIBERGLASS SOUND LINING
- DUCT WITH 2-INCH INSULATION W/VAPOR BARRIER JACKET

NOTE:
A FIRESTOP SYSTEM IS REQUIRED TO BE USED ON ALL PIPES AND DUCTS THAT PENETRATE THE SECOND LEVEL FLOOR AND THAT PENETRATE THE CORRIDOR WALLS. TREMCO HAS VARIES SYSTEMS THAT CAN BE USED. FIRESTOP SYSTEMS SHALL HAVE A U.L. LABEL, AND INSTALLED IN ACCORDANCE WITH THE MANUFACTURERS' INSTRUCTIONS.

EXHIBIT DRAWING

Revisions:

KLUGE & ASSOCIATES C.D.
ARCHITECTURE • INTERIORS • GRAPHICS
KENAI, ALASKA (907)283-3698
kluge@alaska.net

ALASKA REGIONAL AIRCRAFT FIRE TRAINING CENTER
KENAI, ALASKA

Drawn: GDH
Checked: DGH
Date: 7-11-97
Project:
File Name: FIRE1

EQUIPMENT, LEGEND
PLUMBING FIXTURES

ONE INCH BAR ON ORIGINAL DRAWING: SCALE ACCORDINGLY.
0 1"

Sheet: M1

COPYRIGHT KLUGE & ASSOCIATES

C:\ACADWIN\FIRE1 Thu Jul 10 14:51:54 1997

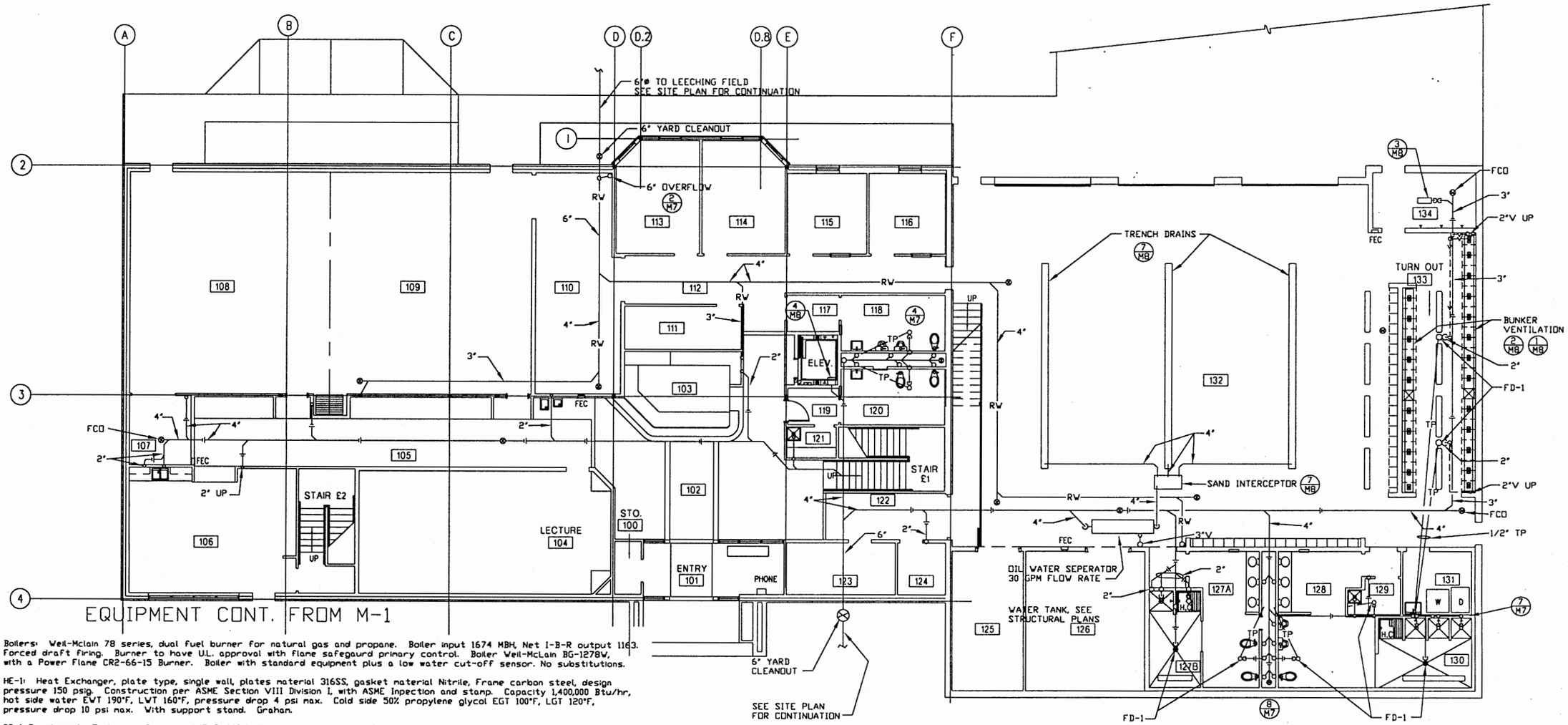

SEE ARCHITECTURAL PLANS FOR LOCATION OF SAND INTERCEPTOR AND OIL/WATER SEPERATOR

Boilers: Weil-Mclain 78 series, dual fuel burner for natural gas and propane. Boiler input 1674 MBH, Net I-B-R output 1163. Forced draft firing. Burner to have U.L. approval with flame safegaurd primary control. Boiler Weil-McLain BG-1278W, with a Power Flame CR2-66-15 Burner. Boiler with standard equipment plus a low water cut-off sensor. No substitutions.

HE-1: Heat Exchanger, plate type, single wall, plates material 316SS, gasket material Nitrile, Frame carbon steel, design pressure 150 psig. Construction per ASME Section VIII Division I, with ASME Inpection and stamp. Capacity 1,400,000 Btu/hr, hot side water EWT 190°F, LWT 160°F, pressure drop 4 psi max. Cold side 50% propylene glycol EGT 100°F, LGT 120°F, pressure drop 10 psi max. With support stand. Grahan.

BB-1 Baseboard: Enclosure Sterling JVB-S, 14" high enclosure mounted 4" above floor, total height 18", louvered slope top, 14 gauge cold rolled steel, baked primer for painting on the job site. Backplate Partial, 20 gauge. Bracket/hanger ball bearing with slide cradle. Heating element 3/4" copper tube, fin size 4-1/2" x 3-3/8", 50 fins per foot, output of 1120 Btu/hr-lin ft. Length shown on drawings is for heating element.

BB-2 Baseboard: See detail on drawing for enclosure. Pipe support use sterling roll pipe hangers. Element support use Sterling slide cradles which rest on silent glide ball bearings. Sterling heating element consists of 3/4" copper tube, fin size 4-1/4" x 3-5/8", 50 fins per foot, 2 tubes spaced on 10" centers, with a nominal output of 1960 Btu/Hr-lin ft. Length shown on drawings is for the heating element.

UH-1: Unit Heater, Trane 38-S, 543 cfm 14.3 MBH output with 180°F EWT, 20°F drop, 1.5 gpm flow, 1/20 Hp, 120 V, 60 Hz. Line voltage thermostat cycles fan.

UH-2: Unit Heater. Trane 185-S, 2808 cfm, 104 MBH output with 180 °FEWT, 20°F drop, 11 gpm flow. 1/4 HP, 120 V, 60 Hz. Line voltage thermostat cycles fan.

CUH-1: Cabinet Unit Heater, Inverted vertical Cabinet, 220 cfm, 19.8 MBH with 1 gpm flow at 180°F EWT, with fan on high speed, Fan 1/20 Hp, 120/60/1. Cycle fan with a line voltage wall thermostat. Provide protective lockable cover over thermostat. With a 1" throwaway filter, air in top front, air out bottom front. Trane FF-M-B-020-1-A-DO-B-F-3-0-0-B-3-M-1-000.

GFUH-1: Gas Fired Unit Heaters, Input 350 MBH, output 280 MBH, air delivery 5000 cfm. 1/3 Hp, 120V, 60 Hz. 10"ø type "B" gas vent. Wall thermostat cycles heater.

Oil Water Seperator, Flow rate 30 gpm. LLS series as manufactured by Anchorage Tank and Welding Inc. utilizing Facet International MPak system. The MPak is an assembly of special patented coalescing plates to remove oil droplets. Seperator has a control panel to monitor high oil and low water. The floor plate cover allows for tank access for inspection, maintenance, and oil removal.

CP-1 A&B: Circulating pumps primary and secondary. 140 gpm at 40 Ft Hd. Grundfos UPS 80-160, 2Hp, 480V, 3ø, 60 Hz.

CP-2: Circulating pump, Hot side of HE-1. 100 gpm at 20 ft Hd. Grundfos UMS 80-80, 1 Hp, 480V, 3ø, 60 Hz.

CP-3: Circulating pump, cold side of HE-1. 80 gpm @ 44Ft. Hd. Grundfos UPS 50-240, 1 1/2Hp, 408V, 3ø, 60 Hz.

CP-4: Circulating Pump thru water heaters, 25 gpm @ 44 Ft. Hd. Grundfos UP 43-75 BF, 1/6 Hp, 120 V, 1ø, 60 Hz.

CP-5: HWCP, 5 Gpm @ 5 Ft Hd. Grundfos UP-15-18 SU, 1/33 Hp, 120V, 1ø, 60 Hz.

CP-6: Circulating Pump. Apparatus slab heating, 16 gpm at 13 Ft. Hd. Grundfos UP26-64F, 1/12 Hp, 120V, 1ø, 60Hz.

CP-7&8: Circulating pumps, sidewalk snow melting, 6 gpm at 12 Ft. Hd. Grundfos UP 25-64SU. 1/12 Hp, 120V, 1ø, 60 Hz.

CP-9: Circulating pump, Parking slab snow melting, 51 gpm at 23 Ft. Hd. Grundfos UPS 50-80/4, 3/4 Hp, 480V, 3ø, 60 Hz.

CP-10: Circulating pump, Prop control slab heating. 3 gpm at 7 Ft Hd. Grundfos UPS 15-42F, 3-speed pump. 1/25 Hp, 120V, 1ø, 60 Hz.

CP-11: Circulating pump, Chiller glycol, 100 gpm @ 45 Ft. Hd. Grundfos UPS 80-160. 3 Hp, 480V, 3ø, 60 Hz.

No subsitutions for Grundfos pumps.

UNDERFLOOR PLAN

1/8"=1'0"

E N S W

EXHIBIT DRAWING

Revisions:

KLUGE & ASSOCIATES
ARCHITECTURE • INTERIORS • GRAPHICS
KENAI, ALASKA (907)283-3698
kluge@alaska.net

ALASKA REGIONAL AIRCRAFT FIRE TRAINING CENTER
KENAI, ALASKA

Drawn: GDH
Checked: DGH
Date: 7-11-97
Project:
File Name: FIRE2

UNDERLFOOR EQUIPMENT, CONT.

ONE INCH BAR ON ORIGINAL DRAWING: SCALE ACCORDINGLY.
0 1"

Sheet: M2

COPYRIGHT KLUGE & ASSOCIATES

C:\ACADWIN\FIRE2 Thu Jul 10, 14:51:36 1997

EXHIBIT DRAWING

NOTE:

1. GAS METER AND REDUCING VALVE DEMAND 7853 MBH WITH 4" & 3" SUPPLIES TO BUILDING. 11-INCH WC GAS PRESSURE
2. PROPANE PRESSURE REDUCING VALVE, PROPANE PIPING IS BROUGHT TO THE BUILDING ON THE SITE WORK DRAWINGS. MINIMUM 5 PSIG PROVIDE AT THE BUILDING A PRESSURE REGULATOR TO SUPPLY 1 PSIG PROPANE TO THE GENERATOR AND HEATING BOILERS. DEMAND IS 2400 CFH, PROVIDE SHUT-OFF VALVES.

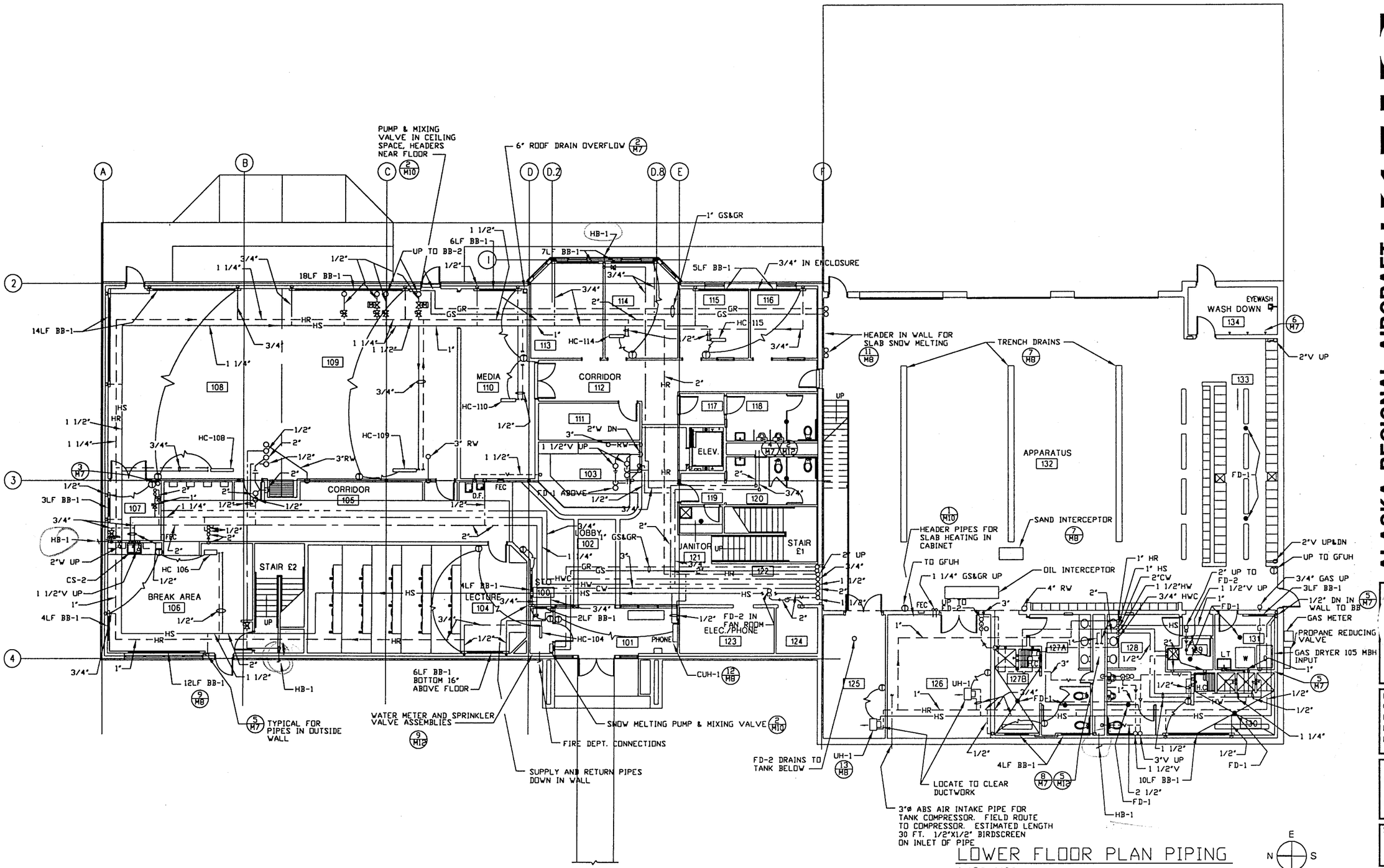

LOWER FLOOR PLAN PIPING

1/8"=1'0"

Revisions:

KLUGE & ASSOCIATES
ARCHITECTURE • INTERIORS • GRAPHICS
C.D.
KENAI, ALASKA
(907)283-3698
kluge@alaska.net

ALASKA REGIONAL AIRCRAFT FIRE TRAINING CENTER
KENAI, ALASKA

Drawn: GDH
Checked: DGH
Date: 7-11-97
Project:
File Name: FIRE3

1ST FLOOR PIPING

ONE INCH BAR ON ORIGINAL DRAWING: SCALE ACCORDINGLY.
0 1"

Sheet: M3

COPYRIGHT KLUGE & ASSOCIATES

C:\ACADWIN\FIRE3 Thu Jul 10, 14:51:14 1997

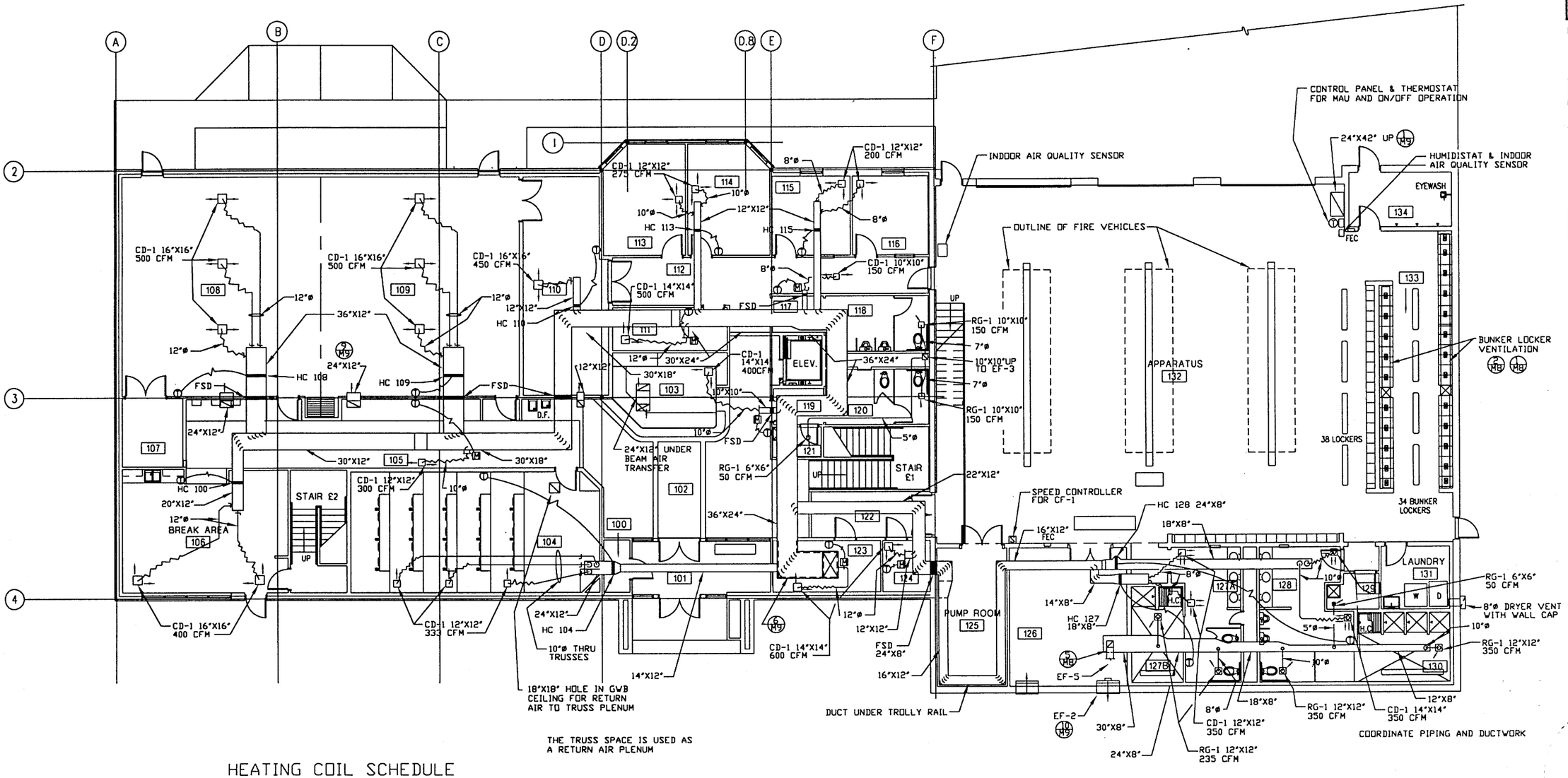

HEATING COIL SCHEDULE

COIL #	CFM	L X H	EAT	LAT	GPM
104	1000	12"X24"	55	75	1.5
106	800	20"X12"	55	75	1.2
108	1500	36"X12"	55	75	2.2
109	1500	36"X12"	55	75	2.2
110	450	12"X12"	55	75	.7
114	550	12"X12"	55	75	.8
115	400	12"X12"	55	75	.6
127	470	18"X8"	55	75	.7
128	700	24"X8"	55	75	1.0

EWT 190°F
LWT 160°F
COILS SHALL BE DUNHAM-BUSH, NO SUBSTITUTIONS.

LOWER FLOOR PLAN, SHEET METAL

1/8"=1'0"

N E S W

EXHIBIT DRAWING

Revisions:

KLUGE & ASSOCIATES
ARCHITECTURE • INTERIORS • GRAPHICS
C.D.
KENAI, ALASKA (907)283-3698
kluge@alaska.net

ALASKA REGIONAL AIRCRAFT FIRE TRAINING CENTER
KENAI, ALASKA

Drawn: GDH
Checked: DGH
Date: 7-11-97
Project:
File Name: FIRE4

1ST FLOOR PLAN
DUCTWORK

ONE INCH BAR ON ORIGINAL DRAWING: SCALE ACCORDINGLY.
0 1"

Sheet: **M4**

COPYRIGHT KLUGE & ASSOCIATES

C:\ACADWIN\FIRE4 Thu Jul 10 14:50:55 1997

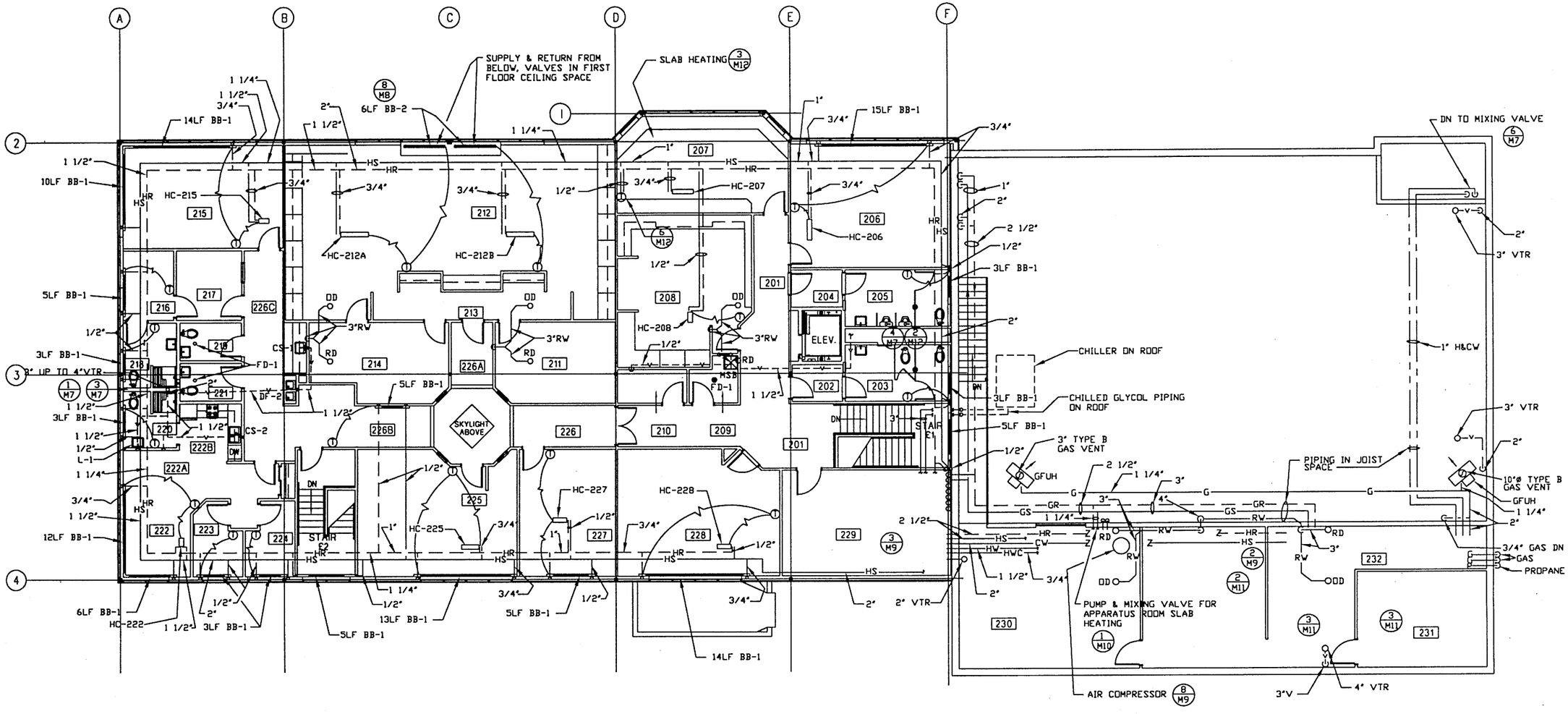

2ND FLOOR PLAN PIPING

1/8"=1'0"

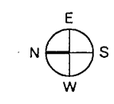

EXHIBIT DRAWING

Revisions:

KLUGE & ASSOCIATES
ARCHITECTURE • INTERIORS • GRAPHICS
KENAI, ALASKA (907)283-3698
kluge@alaska.net
C.D.

ALASKA REGIONAL AIRCRAFT FIRE TRAINING CENTER
KENAI, ALASKA

Drawn: GDH
Checked: DGH
Date: 7-11-97
Project:
File Name: FIRE5

2ND FLOOR PIPING
PIPING

ONE INCH BAR ON ORIGINAL DRAWING: SCALE ACCORDINGLY.
0 1"

Sheet: **M5**

COPYRIGHT KLUGE & ASSOCIATES

C:\ACADWIN\FIRE5 Thu Jul 10 14:50:25 1997

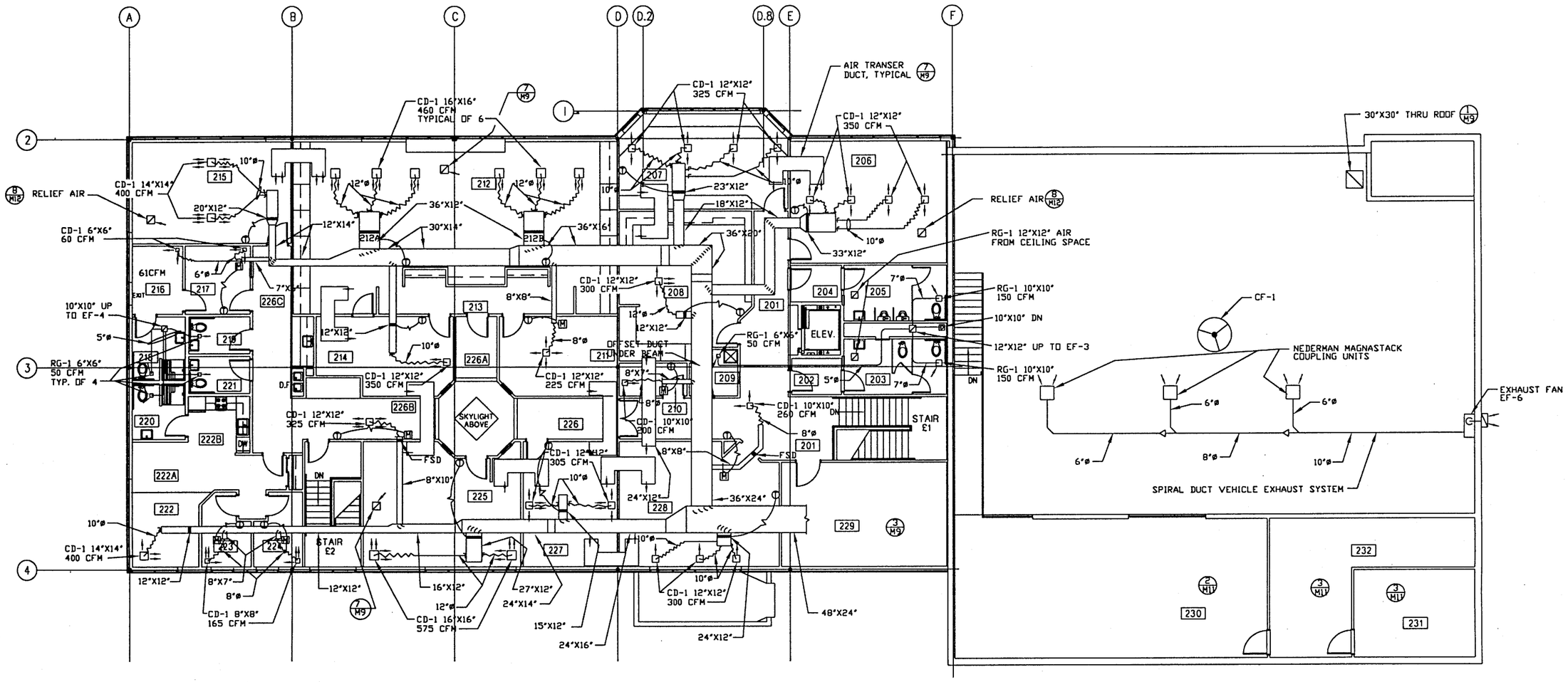

HEATING COIL SCHEDULE

COIL #	CFM	L X H	EAT	LAT	GPM
206	1400	33"X12"	55	75	2.1
207	1300	33"X12"	55	75	1.9
208	300	12"X12"	55	75	.5
212A	1400	36"X12"	55	75	2.1
212B	1400	36"X12"	55	75	2.1
214	450	12"X12"	55	75	.7
215	800	20"X12"	55	75	1.2
222	400	12"X12"	55	75	.6
225	1150	27"X12"	55	75	1.7
227	610	15"X12"	55	75	.9
228	900	24"X12"	55	75	1.3

EWT 190°F
LWT 160°F
COILS SHALL BE DUNHAM-BUSH, NO SUBSTITUTIONS.

UPPER FLOOR PLAN, SHEET METAL

1/8"=1'0"

N E S W

EXHIBIT DRAWING

VEHICLE EXHAUST SYSTEM

Vehicle exhaust system shall be a Nederman Magnastat System, no subsititutions. The owner is currently in the process of purchasing trucks, they desire Oshkosh T-1500 and T-3000 trucks. When the trucks are purchased the exhaust system can be finalized.

The system shall automatically couple as the truck is backed in, the carriage head will move on a rail to collect vehicle exhaust as the truck moves in the parking area. When the truck drives out, a magnet is switched off at the doorway and the exhaust stack slips freely out of the carriage. The vehicle exhaust stack shall be connected to the exhaust system whenever the truck is in the parking area.

The exhaust fan shall automatically activate prior to engine startup or connection to the system. Nederman Auto-Start system.

In addition to handling response calls, the vehicle exhaust system must be capable of handling pump/load tests.

Exhaust fan shall be sized to handle three trucks operating at the same time.

Revisions:

KLUGE & ASSOCIATES
ARCHITECTURE • INTERIORS • GRAPHICS
KENAI, ALASKA (907)283-3698
kluge@alaska.net

ALASKA REGIONAL AIRCRAFT FIRE TRAINING CENTER
KENAI, ALASKA

Drawn: GDH
Checked: DGH
Date: 7-11-97
Project:
File Name: FIRE6

2ND FLOOR PLAN
DUCTWORK

ONE INCH BAR ON ORIGINAL DRAWING: SCALE ACCORDINGLY.
0 1"

Sheet: **M6**

COPYRIGHT KLUGE & ASSOCIATES

C:\ACADWIN\FIRE6 Thu Jul 10 14:50:05 1997

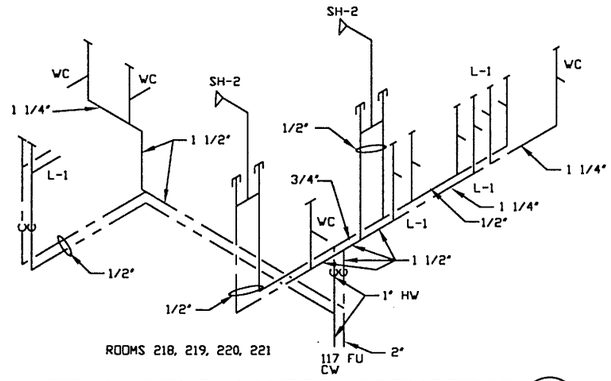

HOT & COLD WATER ISOMETRIC (1 / M5)

NTS

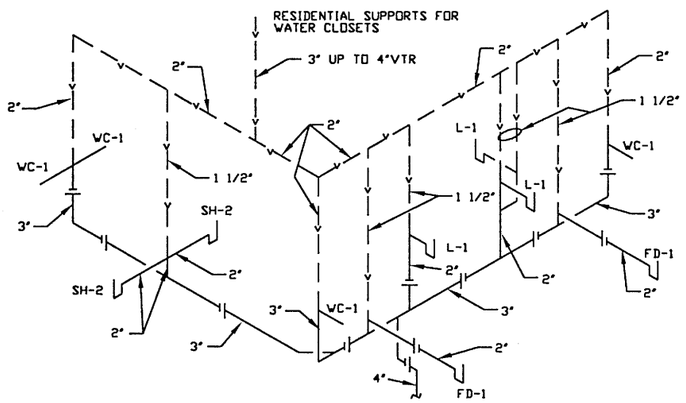

ROOMS 218, 219, 220, 221

WASTE AND VENT ISOMETRIC (3 / M3,5)

NTS

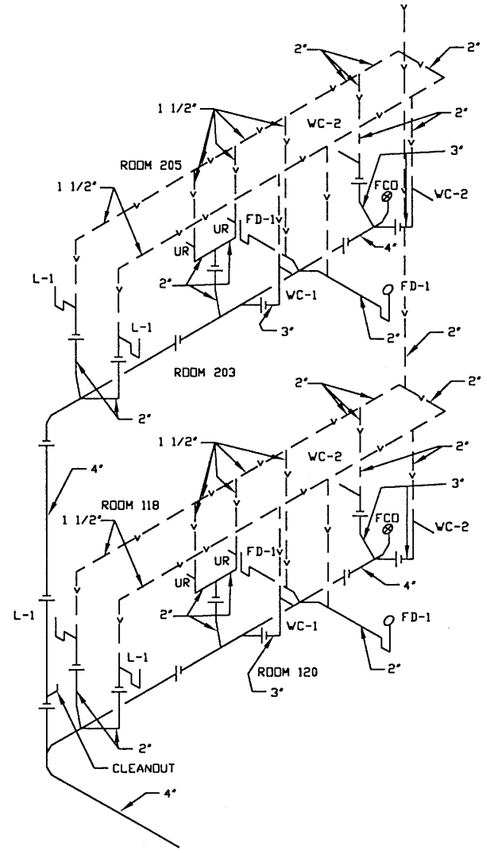

WASTE AND VENT ISOMETRIC (4 / M2,3,5)

NTS

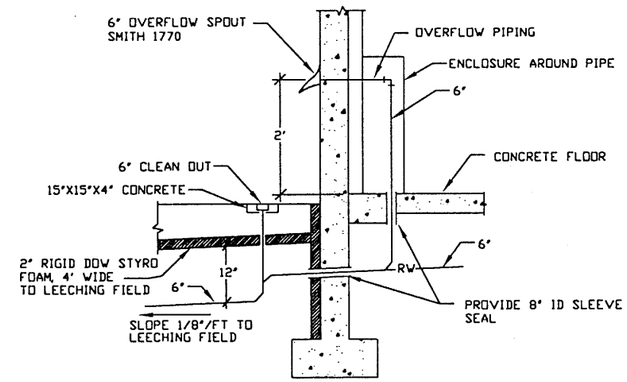

RAINLEADER OVERFLOW PIPING (2 / M2,3)

NTS

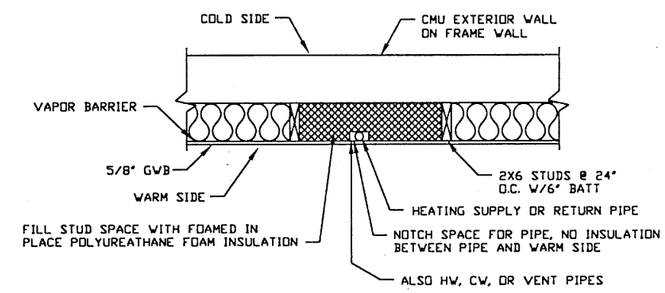

EXTERIOR WALL PIPE DETAIL (5 / M3,5)

NTS

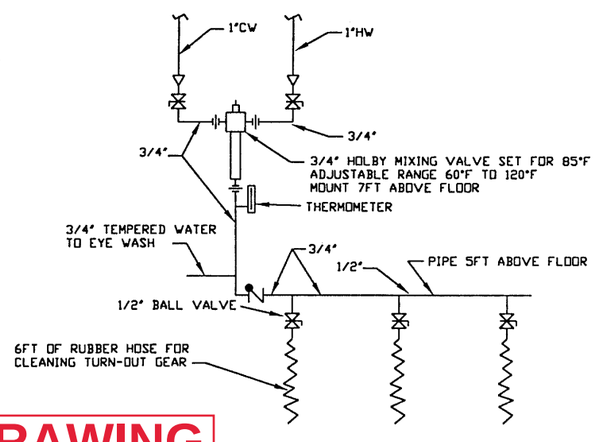

EXHIBIT DRAWING

SHOWER #3 DETAIL (6 / M3)

NTS

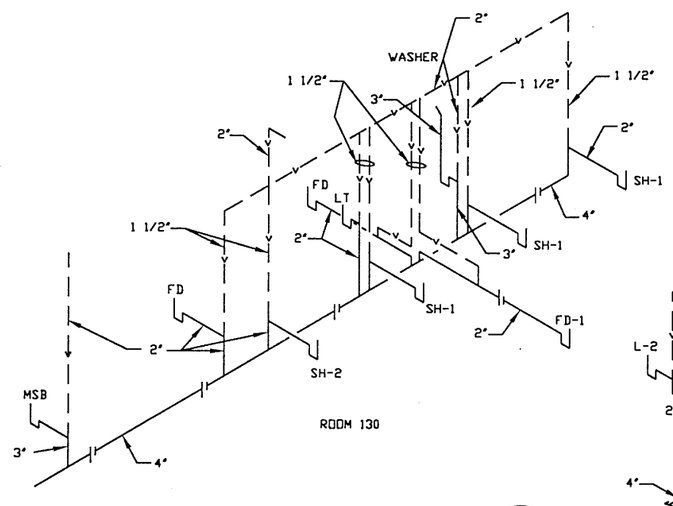

WASTE AND VENT ISOMETRIC (7 / M2,3)

NTS

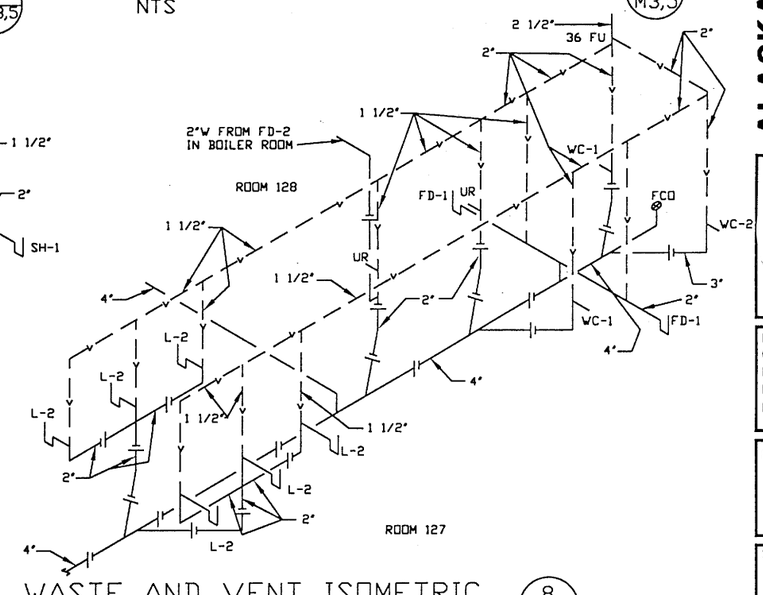

WASTE AND VENT ISOMETRIC (8 / M2,3)

NTS

Revisions:

KLUGE & ASSOCIATES
ARCHITECTURE • INTERIORS • GRAPHICS
KENAI, ALASKA (907)283-3698
kluge@alaska.net

ALASKA REGIONAL AIRCRAFT FIRE TRAINING CENTER
KENAI, ALASKA

Drawn: GDH
Checked: DGH
Date: 7-11-97
Project:
File Name: FIRE7

PLUMBING DETAILS

Sheet: **M7**

COPYRIGHT KLUGE & ASSOCIATES

C:\ACADWIN\FIRE7 Thu Jul 10 14:49:45 1997

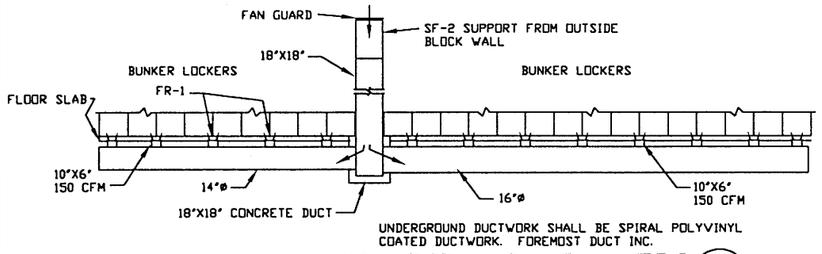

BUNKER LOCKER VENTILATION, 24 BUNKERS (1 / M2,4)
1/4"=1'0"

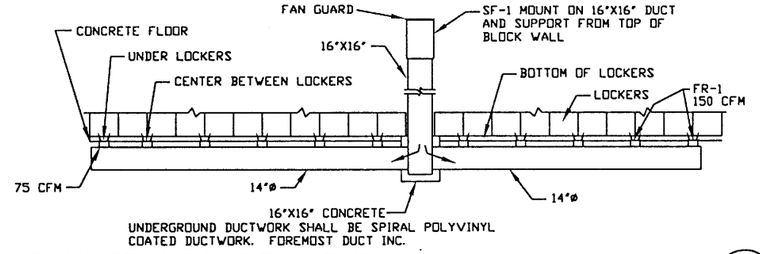

BUNKER LOCKER VENTILATION, 19 BUNKERS (2 / M2,4)
1/4"=1'0"

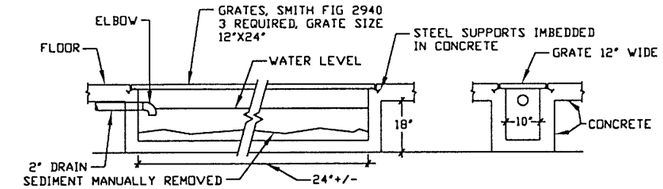

WASHDOWN SH-3 TRENCH DRAIN (3 / M2,3)
1/2"=1'0"

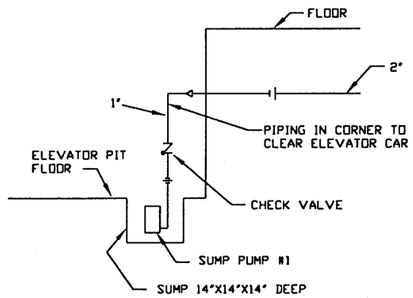

ELEVATOR SUMP PUMP (4 / M2)
NTS

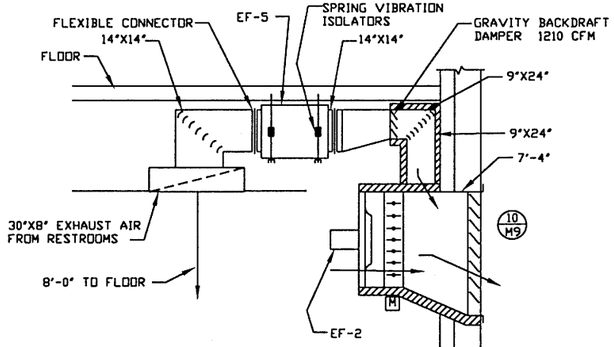

EF-5 SECTION (5 / M4)
NTS

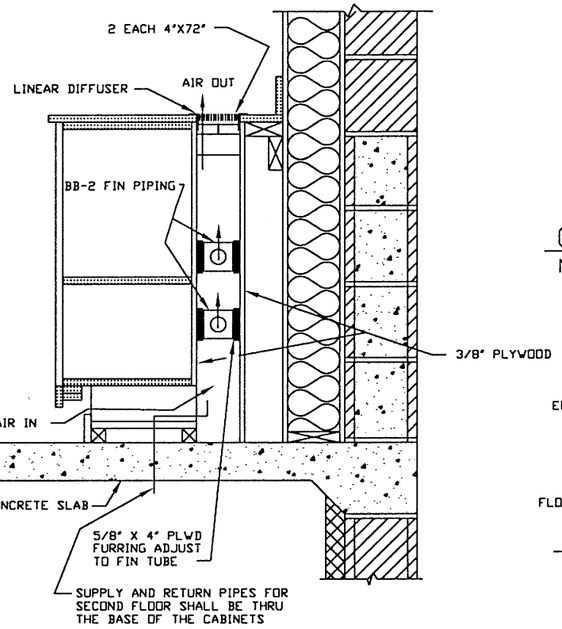

OPERATIONS CASEWORK DETAIL (8 / M5)
NTS

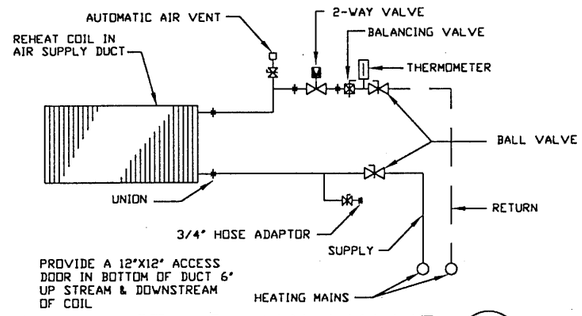

COIL WITH 2-WAY VALVE (6 / M4,6)
NTS

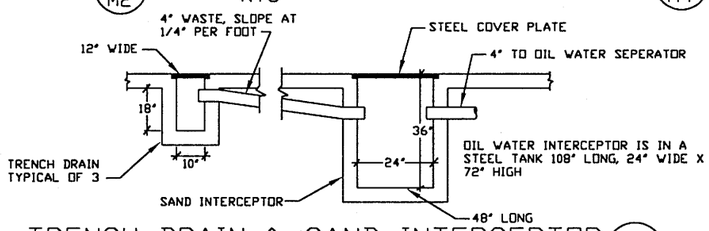

TRENCH DRAIN & SAND INTERCEPTOR (7 / M2,3)
1/2"=1'0"

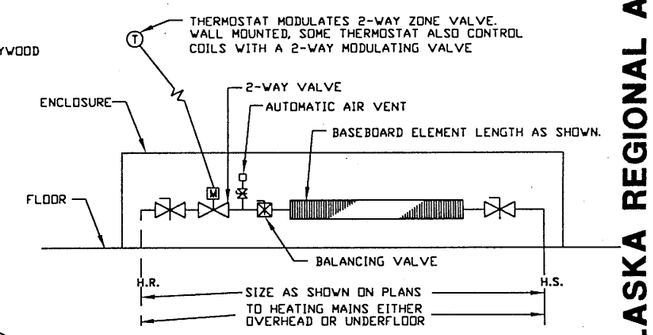

BASEBOARD-1 DETAIL (9 / M3,5)
NTS

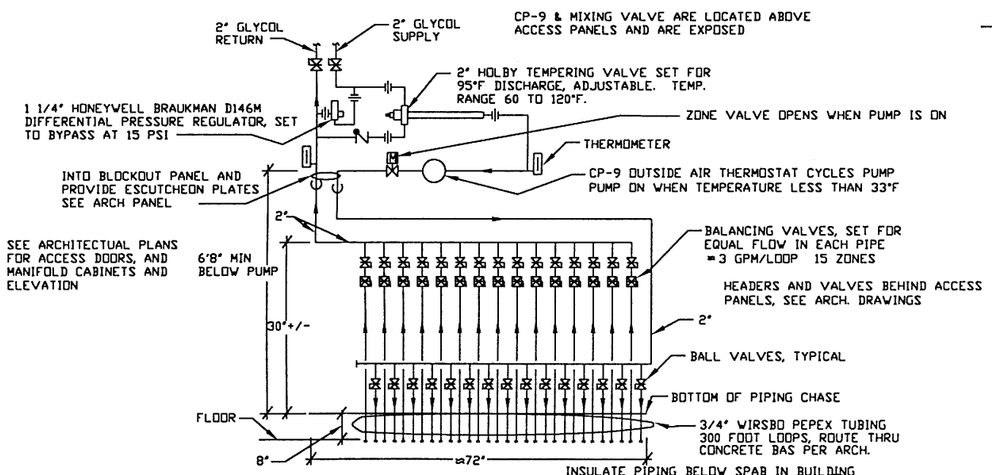

SNOW MELTING (11 / M10)
NTS

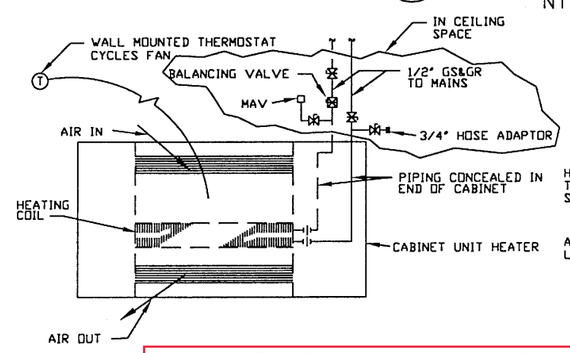

EXHIBIT DRAWING

CABINET UNIT HEATER DETAIL (12 / M3)
NTS

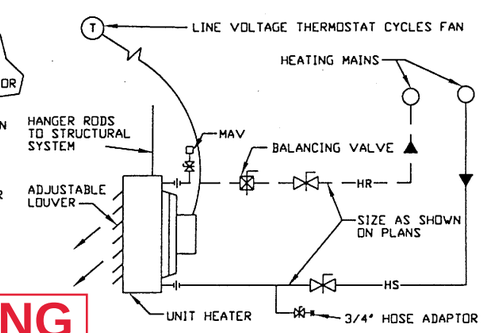

UNIT HEATER (13 / M3,11)
NTS

Revisions:

KLUGE & ASSOCIATES
ARCHITECTURE • INTERIORS • GRAPHICS
KENAI, ALASKA (907)283-3698 kluge@alaska.net

ALASKA REGIONAL AIRCRAFT FIRE TRAINING CENTER
KENAI, ALASKA

Drawn: GDH
Checked: DGH
Date: 7-11-97
Project:
File Name: FIRE8

HEATING DETAILS

ONE INCH BAR ON ORIGINAL DRAWING: SCALE ACCORDINGLY. 0 1"

Sheet: M8

COPYRIGHT KLUGE & ASSOCIATES

C:\ACADWIN\FIRE8 Thu Jul 10,14:49:23 1997

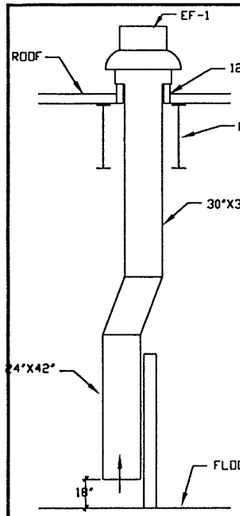

EF-1 SECTION (1 / M4,6)
1/4"=1'0"

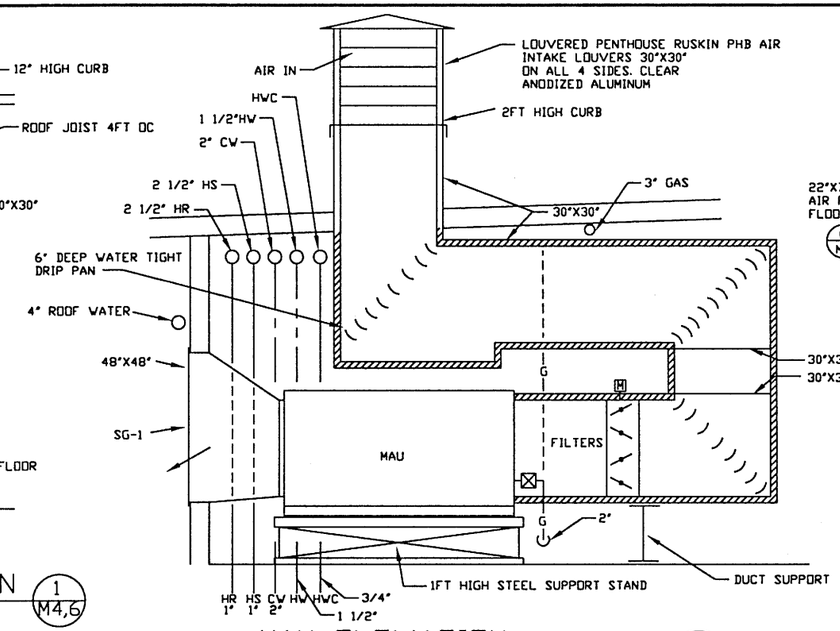

MAU ELEVATION (2 / M11)
1/2"=1'0"

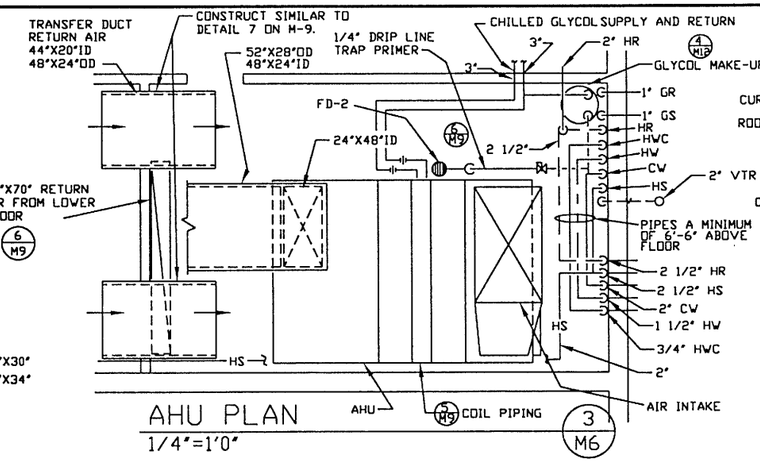

AHU PLAN (3 / M6)
1/4"=1'0"

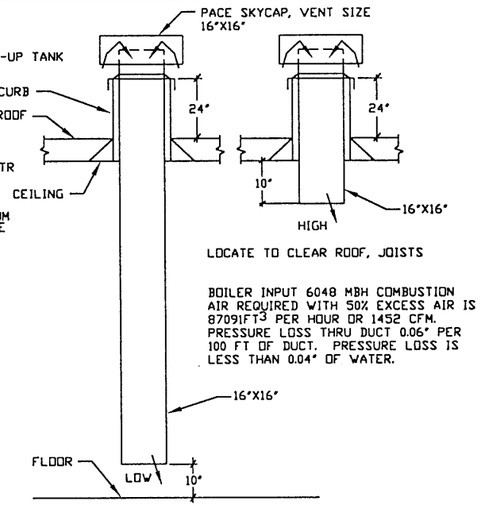

COMBUSTION AIR (4 / M11)
1/2"=1'0"

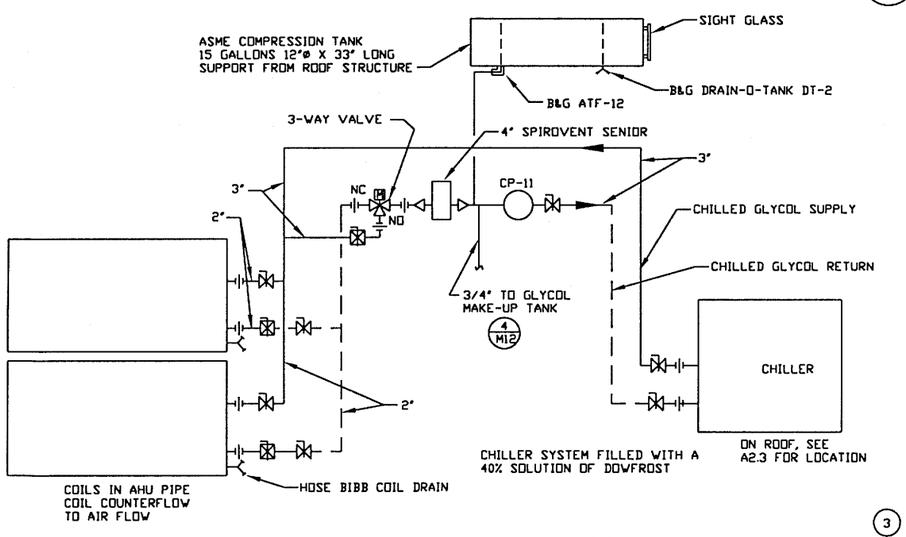

CHILLER PIPING DETAIL (5 / M9)
NTS

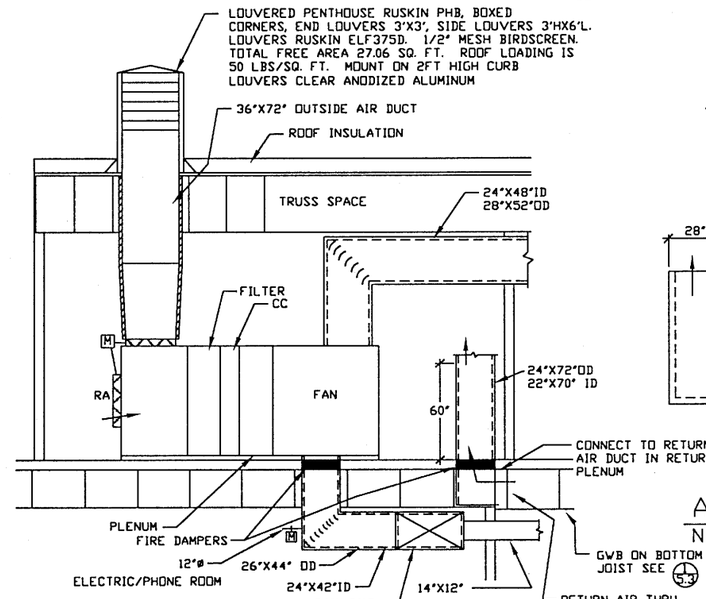

AHU SECTION (6 / M4,9)
1/4"=1'0"

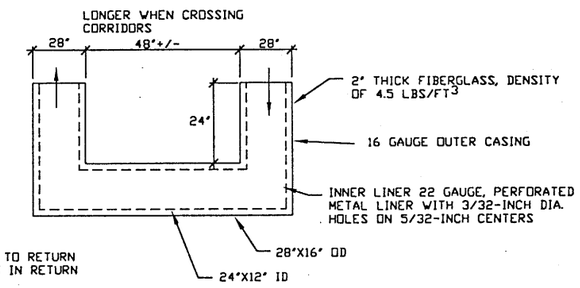

AIR TRANSFER DUCT, TYPICAL (7 / M4,6)
NTS

EXHIBIT DRAWING

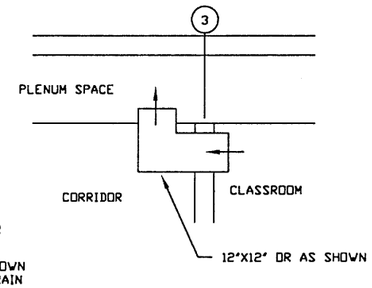

TRANSFER DUCT (9 / M4)
1/4"=1'0"

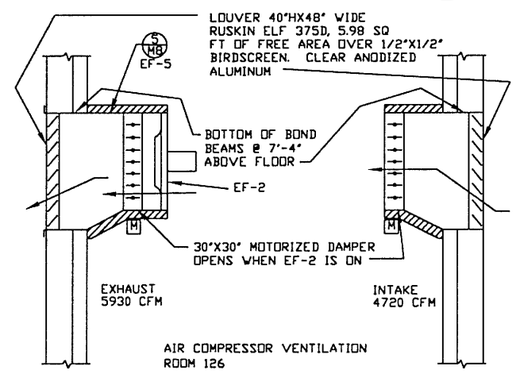

EF-2 SECTION (10 / M4)
1/2"=1'0"

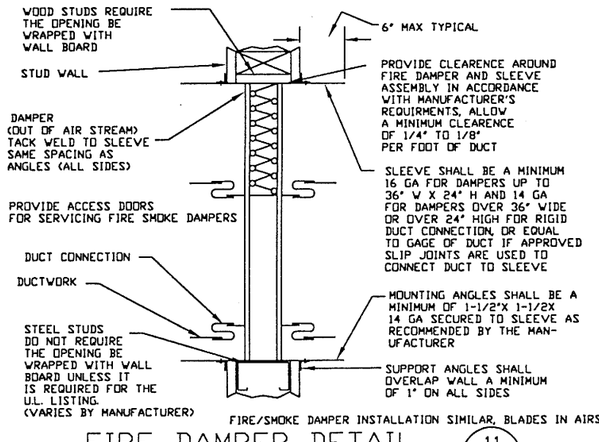

FIRE DAMPER DETAIL (11 / M4,6, 9)
NTS

VALVE CONTROL AIR COMPRESSOR (8 / M5,11)
NTS

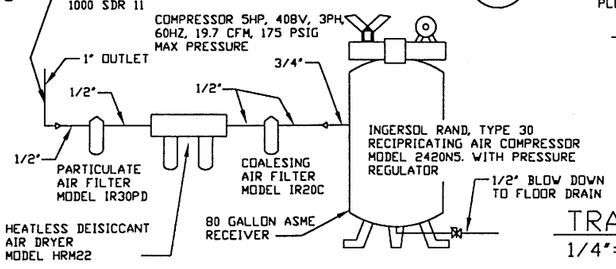

Revisions:

KLUGE & ASSOCIATES
ARCHITECTURE • INTERIORS • GRAPHICS
KENAI, ALASKA (907)283-3698 kluge@alaska.net

ALASKA REGIONAL AIRCRAFT FIRE TRAINING CENTER
KENAI, ALASKA

Drawn: GDH
Checked: DGH
Date: 7-11-97
Project:
File Name: FIRE9

SHEETMETAL
ONE INCH BAR ON ORIGINAL DRAWING; SCALE ACCORDINGLY.
0 1"

Sheet: M9

COPYRIGHT KLUGE & ASSOCIATES

C:\ACADWIN\FIRE9 Thu Jul 10,14:48:58 1997

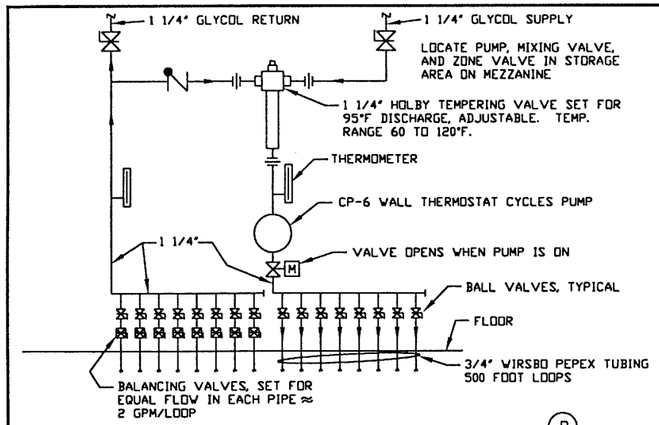

SLAB HEATING APPARATUS ROOM (1 / M10)
NTS

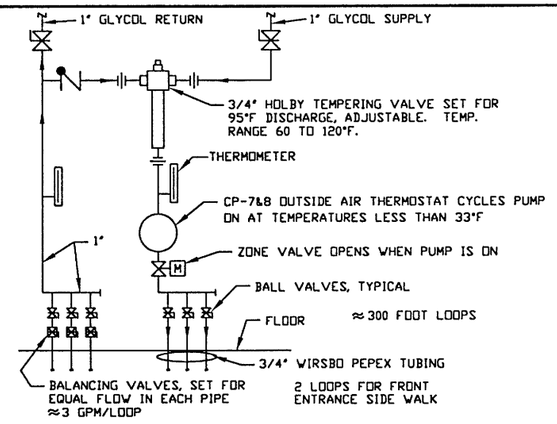

SIDEWALK SNOW MELTING (2 / M3,10)
NTS

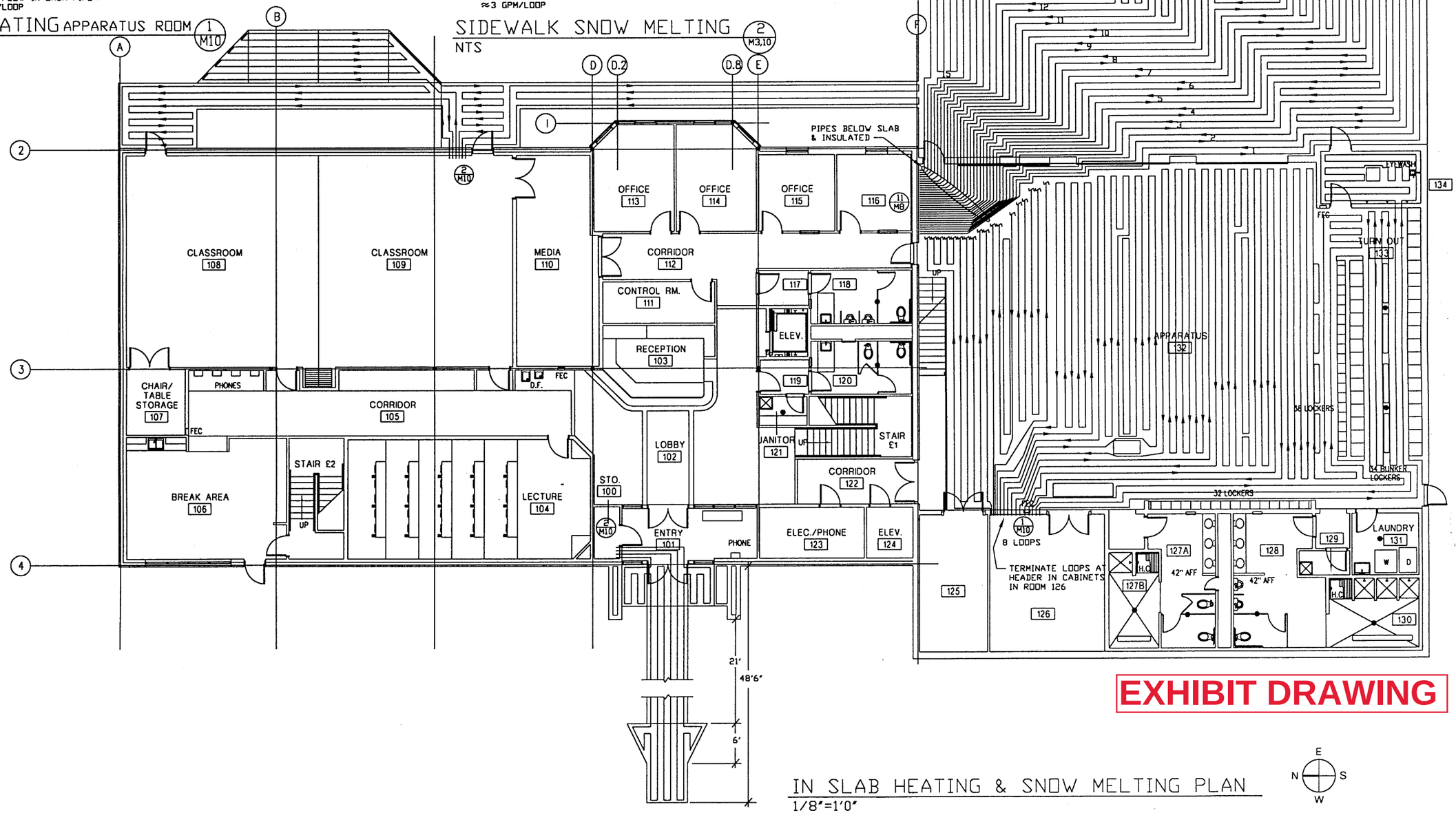

IN SLAB HEATING & SNOW MELTING PLAN
1/8"=1'0"

EXHIBIT DRAWING

Revisions:

KLUGE & ASSOCIATES
ARCHITECTURE • INTERIORS • GRAPHICS
KENAI, ALASKA (907)283-3698
kluge@alaska.net

ALASKA REGIONAL AIRCRAFT FIRE TRAINING CENTER
KENAI, ALASKA

Drawn: GDH
Checked: DGH
Date: 7-11-97
Project:
File Name: FIRE10

SLAB HEATING
SNOW MELTING

ONE INCH BAR ON ORIGINAL DRAWING; SCALE ACCORDINGLY.
0 1"

Sheet: M10

COPYRIGHT KLUGE & ASSOCIATES

C:\ACADWIN\FIRE10 Thu Jul 10, 14:48:38 1997

Revisions:

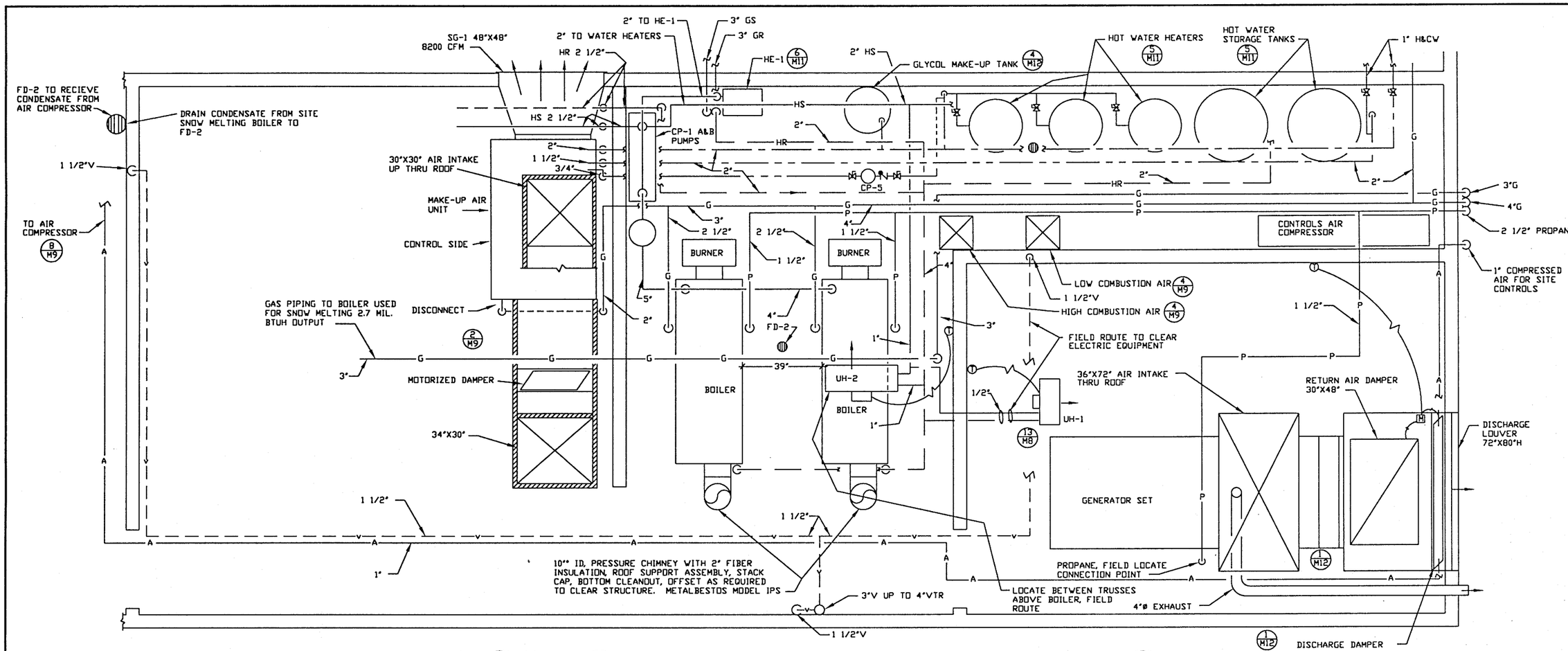

MAU PLAN 2/M5
1/2"=1'0"

BOILER ROOM & GENERATOR ROOM PLAN 3/M5
1/2"=1'0"

EXHIBIT DRAWING

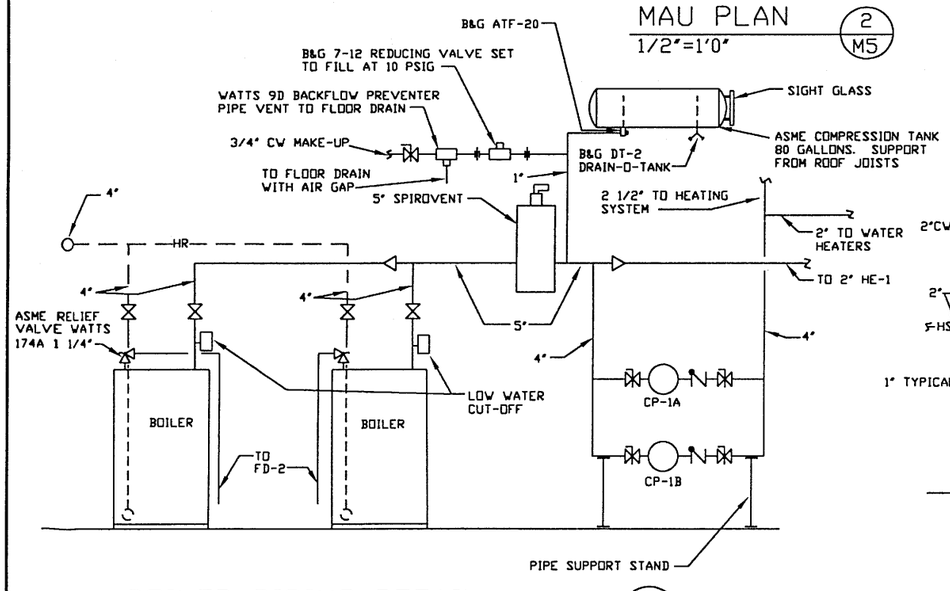

BOILER PIPING DETAIL 4/M11
NTS

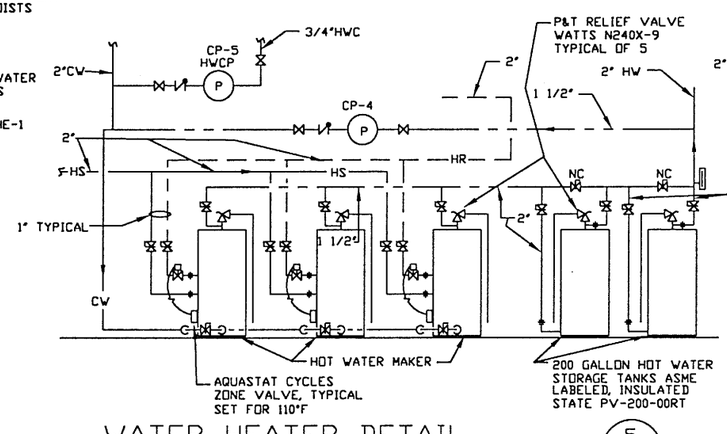

WATER HEATER DETAIL 5/M11
NTS

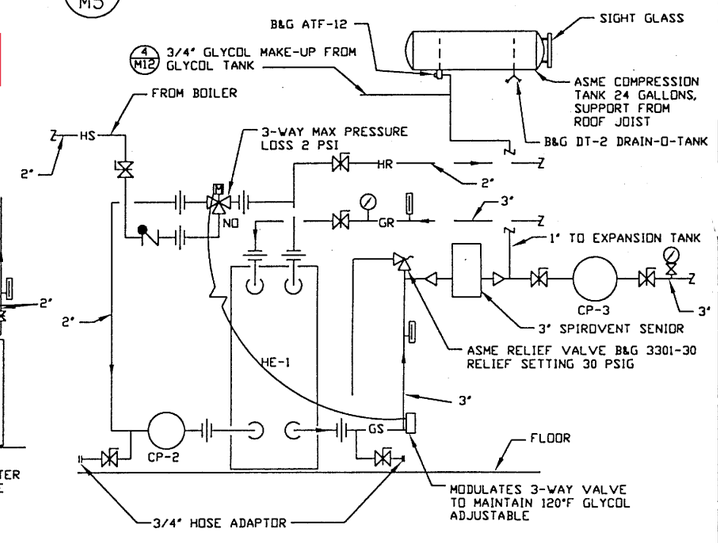

HEAT EXCHANGER PIPING SCHEMATIC 6/M11
NTS

ALASKA REGIONAL AIRCRAFT FIRE TRAINING CENTER
KENAI, ALASKA

KLUGE & ASSOCIATES C.D.
ARCHITECTURE • INTERIORS • GRAPHICS
KENAI, ALASKA (907)283-3698
kluge@alaska.net

Drawn: GDH
Checked: DGH
Date: 7-11-97
Project:
File Name: FIRE11

BOILER ROOM DETAILS

ONE INCH BAR ON ORIGINAL DRAWING: SCALE ACCORDINGLY. 0 1"

Sheet: M11

COPYRIGHT KLUGE & ASSOCIATES

C:\ACADWIN\FIRE11 Thu Jul 10 14:49:19 1997

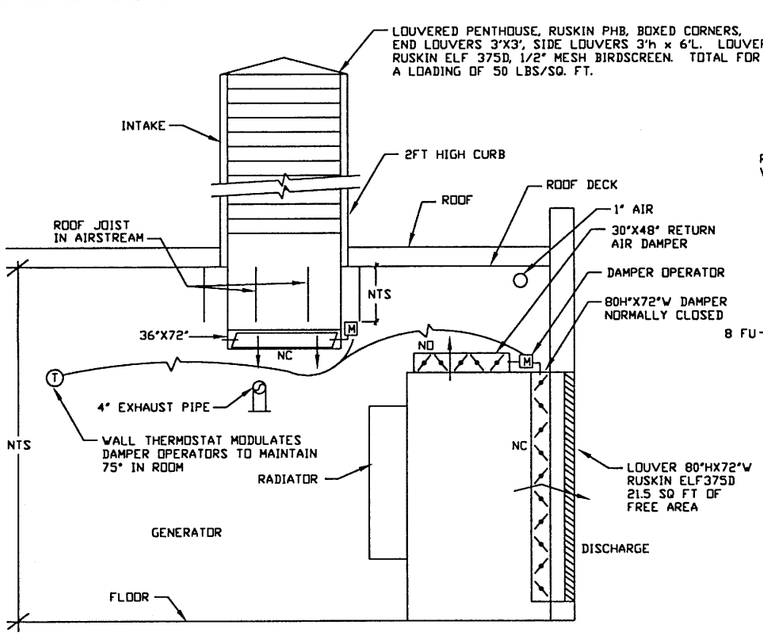

GENERATOR COOLING SECTION (1 / M11)
1/2"=1'0"

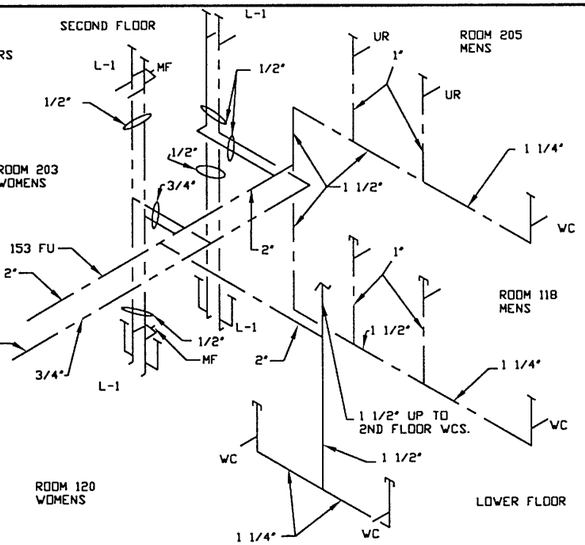

HOT & COLD WATER ISO (2 / M3,5)
NTS

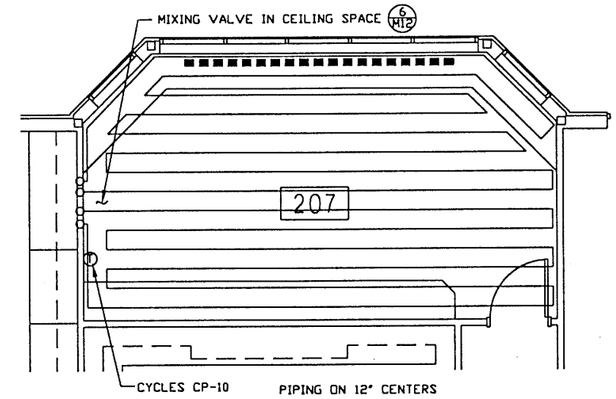

SLAB HEATING DETAIL (3 / M5)
NTS

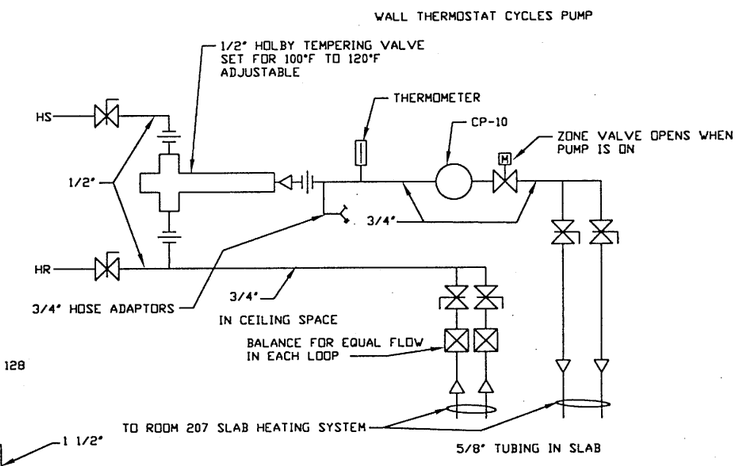

MIXING VALVE DETAIL (6 / M12)
NTS

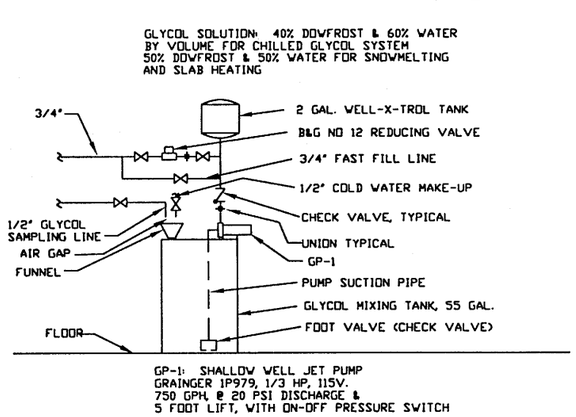

GLYCOL MAKE-UP DETAIL (4 / M9,11)
NTS

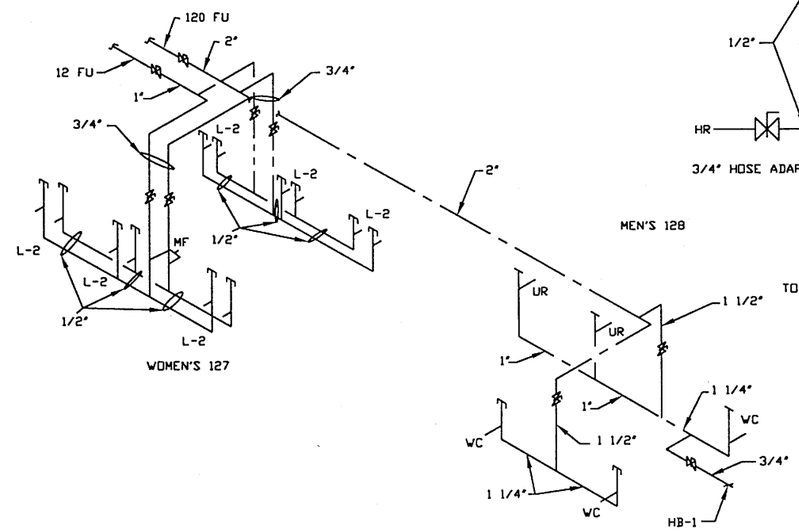

HOT & COLD WATER ISO (5 / M3)
NTS

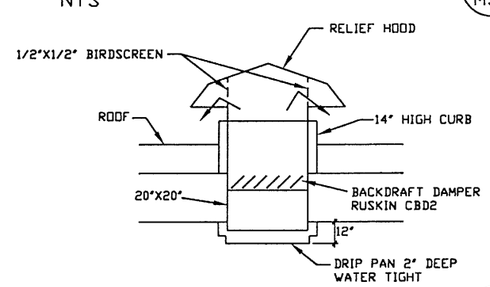

RELIEF AIR DETAIL (8 / M6)
NTS

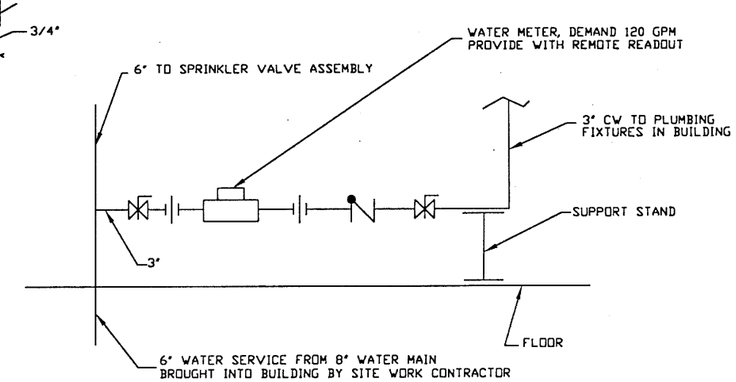

WATER METER DETAIL (9 / M3)
NTS

EXHIBIT DRAWING

Revisions:

KLUGE & ASSOCIATES
ARCHITECTURE • INTERIORS • GRAPHICS
KENAI, ALASKA (907)283-3698
kluge@alaska.net

ALASKA REGIONAL AIRCRAFT FIRE TRAINING CENTER
KENAI, ALASKA

Drawn: GDH
Checked: DGH
Date: 7-11-97
Project:
File Name: FIRE12

DETAILS
ONE INCH BAR ON ORIGINAL DRAWING: SCALE ACCORDINGLY.
0 1"

Sheet: M12

COPYRIGHT KLUGE & ASSOCIATES

C:\ACADWIN\FIRE12 Thu Jul 10 14:47:58 1997

ELECTRICAL ABBREVIATIONS

AC	ABOVE COUNTER
AFF	ABOVE FINISHED FLOOR
AFCI	ARC FAULT CIRCUIT INTERRUPTER
AIC	AMPERES INTERRUPTING CAPACITY
AMP, A	AMPERE
ARCH	ARCHITECTURAL
ATS	AUTOMATIC TRANSFER SWITCH
AWG	AMERICAN WIRE GAUGE
C	CONDUIT
°C	CELSIUS
CB	CIRCUIT BREAKER
CKT	CIRCUIT
CLG	CEILING
CO	CONDUIT ONLY
COMM	COMMUNICATIONS
DW	DISH WASHER
EF	EXHAUST FAN
E,EX, EXIST	EXISTING
EM	EMERGENCY
EMT	ELECTRICAL METALLIC TUBING
FA	FIRE ALARM
FACP	FIRE ALARM CONTROL PANEL
FLA	FULL LOAD AMPS
G, GRD	GROUND
GFCI	GROUND FAULT CURRENT INTERRUPTER
GF	GROUND FAULT PROTECTION
HP	HORSE POWER
IN, "	INCHES
K	DEGREE KELVIN
KCMIL, MCM	THOUSAND CIRCULAR MILS
KVA	KILOVOLT AMPERES
KW	KILOWATT
LC	LIGHTING CONTACTOR
MAX	MAXIMUM
MCB	MAIN CIRCUIT BREAKER
MECH	MECHANICAL
MLO	MAIN LUGS ONLY
MW	MICROWAVE
N	NEUTRAL
NC	NORMALLY CLOSED
NEC	NATIONAL ELECTRIC CODE
NIC	NOT IN CONTRACT
NO	NORMALLY OPEN
NO., #	NUMBER
OFCI	OWNER FURNISHED/ CONTRACTOR INSTALLED
PA	PUBLIC ADDRESS
PC	PHOTO CELL
PH, Ø	PHASE
RECPT, REC	RECEPTACLE
REF	REFRIGERATOR
REQ, REQD	REQUIRED
R	RELOCATED
TELECOM	TELECOMMUNICATIONS
TV	TELEVISION
TYP	TYPICAL
UC	UNDER COUNTER
UG	UNDERGROUND
UON	UNLESS OTHERWISE NOTED
UPS	UNINTERRUPTIBLE POWER SUPPLY
UTP	UNSHIELDED TWISTED PAIR
V	VOLTS
VA	VOLT AMPERES
VFD	VARIABLE FREQUENCY DRIVE
W	WATT
WP	WEATHERPROOF
WR	WEATHER RESISTANT
XFMR	TRANSFORMER

MOUNTING HEIGHT SCHEDULE

*SWITCHES	4'-0"
*RECEPTACLES	1'-6"
*WEATHERPROOF RECEPTACLES	2'-0"
BRANCH PANELS (TOP)	6'-6"
DISCONNECT SWITCHES (TOP)	5'-6"

MOUNTING HEIGHTS SHALL PREVAIL ON ALL NEW CONSTRUCTION UNLESS OTHERWISE NOTED.

MOUNTING HEIGHTS ARE TO CENTER OF DEVICE AND ABOVE FINISHED FLOOR UNLESS OTHERWISE NOTED.

COORDINATE FINAL MOUNTING HEIGHTS FOR DEVICES ABOVE COUNTERS WITH ARCHITECTURAL ELEVATIONS.

COORDINATE FINAL MOUNTING HEIGHTS FOR DEVICES FOR EQUIPMENT WITH ARCHITECTURAL ELEVATIONS.

MOUNTING FOR DEVICES SHOWN ABOVE BASEBOARD HEATERS, 4" ABOVE HEATER, MOUNTED VERTICALLY.

THESE ARE TYPICAL MOUNTING HEIGHTS. NOT ALL DEVICES ARE NECESSARILY APPLICABLE TO THIS PROJECT.

*MOUNTING HEIGHTS COMPLY WITH ICC/ANSI A117.1-09

ELECTRICAL SYMBOLS

LIGHTING FIXTURES

- SURFACE LIGHT FIXTURE
- RECESSED LIGHT FIXTURE
- EMERGENCY LIGHT FIXTURE
- WALL LIGHT FIXTURE - LINEAR
- STRIP LIGHT FIXTURE
- RECESSED CAN LIGHT FIXTURE
- SURFACE LIGHT FIXTURE
- PENDANT LIGHT FIXTURE
- TRACK LIGHT FIXTURE HEAD
- WALL LIGHT FIXTURE
- SELF CONTAINED EMERGENCY LIGHT
- EMERGENCY LIGHT - SINGLE HEAD
- EXIT LIGHT - WALL MOUNTED
- EXIT LIGHT - CEILING MOUNTED
- EXIT LIGHT DIRECTIONAL ARROWS
- FAN & LIGHT COMBINATION
- POLE MOUNTED AREA LIGHT FIXTURE
- FLOOD LIGHT
- WALL MOUNTED AREA LIGHT FIXTURE
- CEILING MOUNTED FAN

LIGHTING CONTROLS

- $ SINGLE POLE SWITCH
- $D DIMMER SWITCH
- $O OCCUPANCY SENSOR SWITCH
- $3 $4 THREE & FOUR WAY SWITCH
- $K KEY OPERATED SWITCH
- PC PHOTOCELL
- M M MOTION SENSOR (WALL & CEILING)
- OS OS OCCUPANCY SENSOR (WALL & CEILING)

CONDUITS AND CONDUCTORS

- CONDUIT OR CABLE, CONCEALED U.N.O.
- #10 NUMBER AND SIZE OF WIRES (NO SLASHES INDICATES 3#12)
- P-# CONDUIT HOMERUN TO PANEL (PANEL & CIRCUIT NUMBER)

LIGHT FIXTURE NOMENCLATURE

- A — FIXTURE TYPE PER SCHEDULE
- a — ASSOCIATED SWITCH OR CONTROL ZONE (NO ID = CONTROL VIA SINGLE ROOM SWITCH) (nl = NIGHT LIGHT)
- P-## — PANEL & CIRCUIT #

FIRE ALARM DEVICES

- FAP FIRE ALARM PANEL
- 135° HEAT DETECTOR (FIXED TEMP. AS NOTED)
- SMOKE DETECTOR
- CO SMOKE/CO DETECTOR COMBO
- HORN
- HORN & STROBE
- STROBE
- FIRE ALARM PULL STATION
- M MAGNETIC DOOR HOLDER

GENERAL

- DASHED SYMBOL = DEVICE TO BE REMOVED
- DASHED LINE = EQUIPEMENT TO BE REMOVED

POWER DEVICES AND EQUIPMENT

- DUPLEX RECEPTACLE / ABOVE COUNTER
- QUADRAPLEX RECEPTACLE / ABOVE COUNTER
- AC GFCI PROTECTED RECEPTACLE / ABOVE COUNTER
- SPLIT WIRED RECEPTACLE
- SIMPLEX RECEPTACLE
- SPECIAL PURPOSE RECEPTACLE, 3Ø & 1Ø AS NOTED
- A DUPLEX SMALL APPLIANCE RECEPTACLE
- D DRYER RECEPTACLE, NEMA 14-30R
- R ELECTRIC RANGE RECEPTACLE, NEMA 14-50R
- FLOOR MOUNTED DEVICE (RECEPTACLE SHOWN)
- CEILING MOUNTED DEVICE (RECEPTACLE SHOWN)
- POWER RECEPTACLE DROP
- J JUNCTION BOX
- ELECTRIC MOTOR
- $ ELECTRIC MOTOR WITH STARTER SWITCH
- EF EXHAUST FAN
- UH UNIT HEATER
- CH CABINET UNIT HEATER
- FLUSH MOUNT ELECTRICAL PANEL - 208V & 480V
- SURFACE MOUNT ELECTRICAL PANEL - 208V & 480V
- NON-FUSED DISCONNECT SWITCH
- FUSED DISCONNECT SWITCH
- COMBINATION MOTOR/STARTER DISCONNECT SWITCH
- V VFD DISCONNECT
- PB AC PUSH BUTTON OR ACCESS CONTROL JUNCTION BOX
- PB AC PUSH BUTTON OR ACCESS CONTROL BOX
- J TRAFFIC CONTROL JUNCTION BOX
- MP W F WALL / FLOOR MOUNTED MODULAR FURNITURE POWER

TELECOMMUNICATION DEVICES

- TELECOMMUNICATIONS OUTLET
- TELEPHONE (VOICE) OUTLET
- FLOOR MOUNTED DEVICE (TELECOMM SHOWN)
- CEILING MOUNTED DEVICE (TELECOMM SHOWN)
- S S SPEAKER (WALL & CEILING)
- TV TV TELEVISION OUTLET (WALL & CEILING)
- TD TD TELEVISION/DATA COMBO OUTLET (WALL & CEILING)
- DC CLOCK (DIGITAL & ANALOG)
- C S CLOCK & SPEAKER COMBINATION
- OP OVERHEAD PROJECTOR

SECURITY SYSTEM DEVICES

- AC INTERCOM / ACCESS CONTROL MASTER STATION
- IC INTERCOM / ACCESS CONTROL DOOR ENTRY STATION
- ES ACCESS CONTROL ELECTRIC STRIKE/LOCK
- PS POWER SUPPLY
- DOOR CHIME
- KEYPAD
- CR CARD READER
- GB GLASS BREAK SENSOR
- SURVEILLANCE CAMERA
- VARIABLE DIRECTION SURVEILLANCE CAMERA
- DOOR BELL BUTTON

LIGHTING FIXTURE SCHEDULE

TYPE ID	MANUFACTURER MODEL NUMBER	FIXTURE DESCRIPTION	LED			MOUNTING	
			LUMENS	WATTS		TYPE	HEIGHT
AL	LITHONIA LIGHTING #2BLT4-A-40L-ADP-SLD-LP835	2'x4' RECESSED TROFFER WITH 3500K COLOR TEMPERATURE, CURVED LINEAR DIFFUSER, AIR RETURN FUNCTION, AND STEP-LEVEL DIMMING DRIVER.	4,063	31	131 lm/w	RECESSED	GRID
AH	LITHONIA LIGHTING #2BLT4-A-60L-ADP-SLD-LP835	SAME AS FIXTURE TYPE 'AL' EXCEPT WITH HIGHER LUMEN OUTPUT.	6,016	48	125 lm/w	RECESSED	GRID
B	LITHONIA LIGHTING #IBHST-15000LM-SD080-MD-MVOLT-OZ10-35K-80CRI-WH	15"x22" HIGH BAY FIXTURE WITH 3500K COLOR TEMPERATURE AND WHITE FINISH.	14,218	137	104 lm/w	SUSPENDED	CEILING
CL	LITHONIA LIGHTING #LDN6-35/05-L06AR-LSS-MVOLT-GZ10	RECESSED DOWNLIGHT WITH 6" APERTURE, 3500K COLOR TEMPERATURE, 01-0V DIMMING, CLEAR TRIM, WET LISTING, AND SEMI-SPECILAR FINISH.	662	8	87 lm/w	RECESSED	GRID / CEILING
CH	LITHONIA LIGHTING #LDN6-35/20-L06AR-LSS-MVOLT-GZ10	SAME AS FIXTURE TYPE 'CL' EXCEPT WITH HIGHER LUMEN OUTPUT.	2,023	23	90 lm/w	RECESSED	GRID / CEILING
D4	LITHONIA LIGHTING #ZL1N-L48-5000LM-FST-MVOLT-35K-80CRI-WH	4' LINEAR STRIP LIGHT WITH 3500K COLOR TEMPERATURE, FROSTED SNAP-ON DIFFUSER, DAMP LISTING, AND WHITE FINISH.	4,515	34	133 lm/w	SURFACE	CEILING / WALL
D8	LITHONIA LIGHTING #TZL1N-L96-10000LM-FST-MVOLT-35K-80CRI-WH	SAME AS FIXTURE TYPE 'D4' EXCEPT WITH 8' LENGTH.	8,881	68	131 lm/w	SURFACE	CEILING / WALL
F2	AXIS LIGHTING #BBWDILED-500-500-80-35-SO-2-AP-UNV-DP-1	2' LINEAR DIRECT / INDIRECT WALL MOUNT WITH 3500K COLOR TEMPERATURE, SPOTLESS LENS SHEILDING, ALUMINUM PAINT FINISH, AND 0-10V DIMMING.	2,000	17	119 lm/w	SURFACE	WALL
F4	AXIS LIGHTING #BBWDILED-500-500-80-35-SO-4-AP-UNV-DP-1	SAME AS FIXTURE TYPE 'F2' EXCEPT WITH 4' LENGTH.	4,000	34	119 lm/w	SURFACE	WALL
F8	AXIS LIGHTING #BBWDILED-500-500-80-35-SO-8-AP-UNV-DP-1	SAME AS FIXTURE TYPES 'F2' & 'F4' EXCEPT WITH 8' LENGTH.	8,000	67	119 lm/w	SURFACE	WALL
G4	AXIS LIGHTING #CCWL-SL-500-80-35-CL(4)-W-UNV-DP-1-AC	4' LINEAR INDIRECT COVE FIXTURE WITH 3500K COLOR TEMPERATURE, WHITE FINISH, AND 0-10V DIMMING. PROVIDE POWER SUPPLIES AND ADDITIONAL ACCESSORIES AS REQUIRED.	2,000	20	100 lm/w	SURFACE	COVE
G8	AXIS LIGHTING #CCWL-SL-500-80-35-CL(8)-W-UNV-DP-1-AC	SAME AS FIXTURE TYPE 'G4' EXCEPT WITH 8' LENGTH.	4,000	40	100 lm/w	SURFACE	COVE
H	LITHONIA LIGHTING #XVML-L48-5000LM-MVOLT-40K-80CRI	4' LINEAR STRIP LIGHT WITH 4000K COLOR TEMPERATURE, WET LISTING, AND GREY HOUSING.	5,365	49	109 lm/w	SURFACE	WALL
I	AXIS LIGHTING #BBRLED-400-80-35-ASO-8-AP-UNV-DP-1-TB15	4"X8' LINEAR ASYMMETRICAL DOWNLIGHT WITH 3500K COLOR TEMPERATURE, 0-10V DIMMING, ALUMINUM PAINT FINISH, AND T-BAR 15/16" MOUNTING. CONFIRM MOUTNING TYPE PRIOR TO ORDERING.	3,200	33	97 lm/w	RECESSED	CEILING
J	LITHONIA LIGHTING #FMML-13-8-30-DNA	ROUND SURFACE MOUNTED LED WITH 13" DIAMETER, 3000K COLOR TEMPERATURE, AND NATURAL ALUMINUM FINISH.	1,898	28	68 lm/w	SURFACE	CEILING
K	LITHONIA LIGHTING #DSXF3 LED-6-P2-40K-FL-MVOLT-YKC62-FV-DBLXD	'SIZE 3' FLOOD LUMINAIRE WITH FLOOD DISTRIBUTION, 4000K COLOR TEMPERATURE, YOKE MOUNTING, FULL VISOR, AND BLACK FINISH.	15,319	183	84 lm/w	SURFACE	PARAPET
SW	LITHONIA LIGHTING #WST LED-P2-40K-VW-MVOLT-DWHGXD	EXTERIOR ARCHITECTURAL TRAPEZOIDAL WALL SCONCE WITH 4000K COLOR TEMPERATURE, WIDE DISTRIBUTION, AND WHITE FINISH.	3,512	25	140 lm/w	SURFACE	WALL
S1	LITHONIA LIGHTING #DSX1 LED-P6-40K-T3M-MVOLT-SPA-HS-DWHXD	'SIZE 1' AREA LUMINAIRE WITH 4000K COLOR TEMPERATURE, TYPE 3 MEDIUM DISTRIBUTION, SQUARE POLE MOUNTING BRACKET, HOUSE-SIDE SHIELD, AND WHITE FINISH.	40,789	343	119 lm/w	POLE	EXISTING 30' POLE
S2	LITHONIA LIGHTING #DSX2 LED-P6-40K-TFTM-MVOLT-SPA-HS-DWHXD	'SIZE 2' AREA LUMINAIRE WITH 4000K COLOR TEMPERATURE, FORWARD THROW DISTRIBUTION, SQUARE POLE MOUNTING BRACKET, HOUSE-SIDE SHIELD, AND WHITE FINISH.	40,789	343	119 lm/w	POLE	EXISTING 30' POLE
EM	LITHONIA LIGHTING #EU2L-M12	THERMOPLASTIC EMERGENCY LIGHT WITH NICKEL-CADMIUM BATTERY AND WHITE HOUSING.	N/A	2	- lm/w	SURFACE	WALL
EX	LITHONIA LIGHTING #LQM-S-W-3-R-120/277-EL N-SD	THERMOPLASTIC EXIT SIGN WITH WHITE HOUSING, NICKEL-CADMIUM BATTERY, RED LETTERING, UNIVERSAL DIRECTIONAL CHEVRONS, AND SELF-DIAGNOSTICS. MOUNT AS SPECIFIED ON DRAWINGS.	N/A	2	- lm/w	SURFACE	WALL / CEILING

NOTE: ALL FIXTURE TYPES, COLORS, & FINISHES ARE TO BE APPROVED BY ARCHITECT / PROJECT MANAGER PRIOR TO ORDERING.

K+A designstudios
ARCHITECTURE + PLANNING
130 TRADING BAY RD. SUITE 330 KENAI, ALASKA 99611
T: 907.283.3698 WWW.KA-DESIGNSTUDIOS.COM

T3 ALASKA LLC
Mechanical & Electrical Engineering
301 Calista Court, Suite 100
Anchorage, AK 99518
Ph: 907-865-7900 AEC L: 1625

Morrison Maierle
engineers · surveyors · planners · scientists

ALASKA REGIONAL FIRE TRAINING CENTER BUILDING REHABILITAION

BID DOCUMENTS
KENAI, ALASKA

Revisions:

STATE OF ALASKA 49TH THOMAS C. ALLEN EE-9877 07/31/19 REGISTERED PROFESSIONAL ENGINEER

Date: JULY 31, 2019
Drawn: MJM
Checked: TCA
Project: 2019.053.0
File Name: E0.1

Sheet Title:
ABBREVIATIONS, SYMBOL LEGEND, & FIXTURE SCHEDULE

Sheet:
E0.1

© Copyright T3 Alaska, LLC

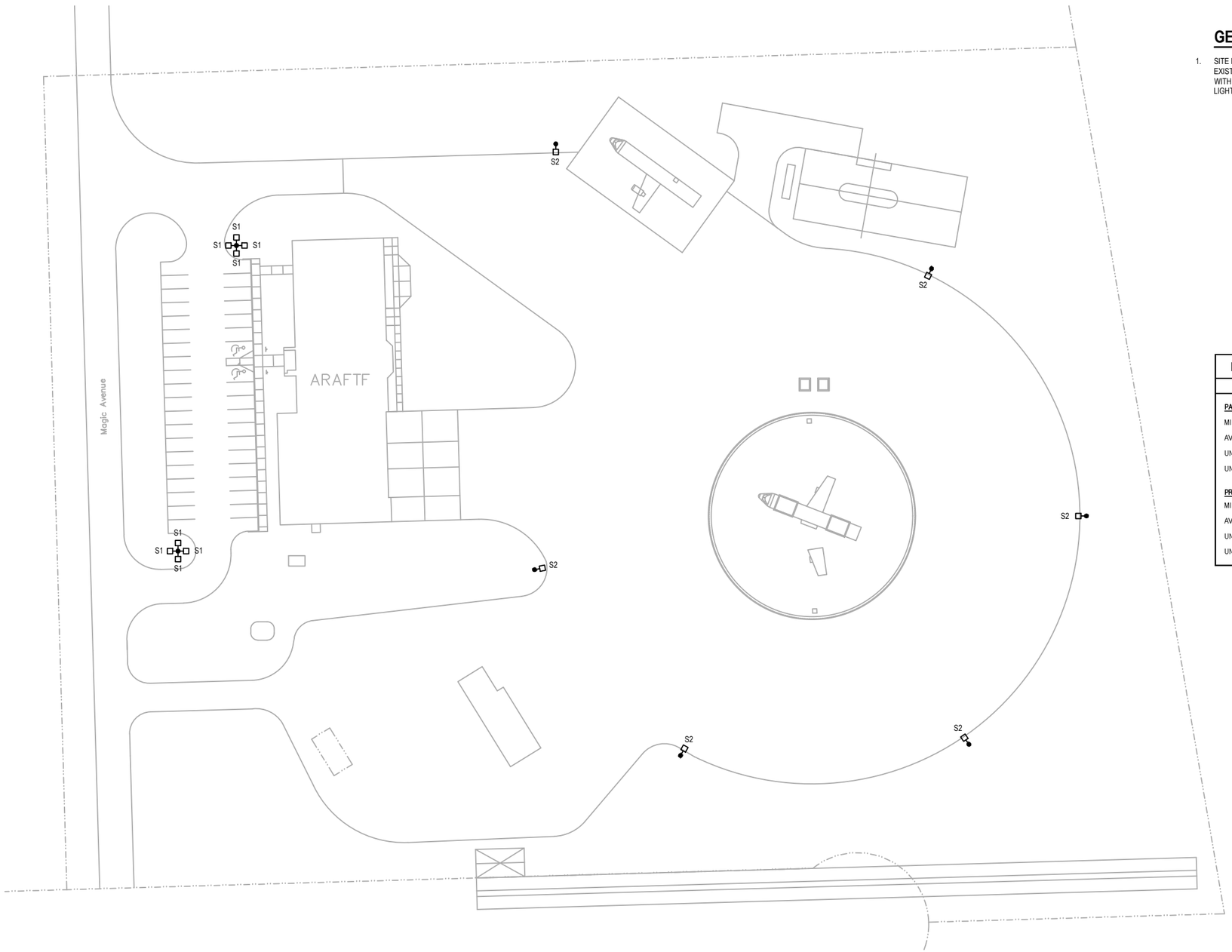

1 ELECTRICAL SITE PLAN

SCALE: 10' 40' 0 20'

GENERAL NOTES

1. SITE LIGHTING FIXTURE HEADS ARE TO BE REPLACED ON A ONE-FOR-ONE BASIS. REUSE EXISTING 5" SQUARE STEEL POLES AT ALL LOCATIONS. MAINTAIN EXISTING CIRCUITRY WITH A NET DECREASE IN LOAD AT EACH FIXTURE. MAINTAIN CONNECTIONS TO EXISTING LIGHTING CONTACTORS.

EXTERIOR ILLUMINATION SUMMARY

DESIGNED PERFORMANCE LEVELS

PARKING LOT		
MINIMUM ILLUMINATION LEVEL	0.4	FC
AVERAGE ILLUMINATION LEVEL	1.7	FC
UNIFORMITY RATIO (MAX:MIN)	13.0:1	
UNIFORMITY RATIO (AVG:MIN)	4.3:1	
PROP TRAINING		
MINIMUM ILLUMINATION LEVEL	0.1	FC
AVERAGE ILLUMINATION LEVEL	1.2	FC
UNIFORMITY RATIO (MAX:MIN)	39.0:1	
UNIFORMITY RATIO (AVG:MIN)	12.0:1	

K+A designstudios
ARCHITECTURE + PLANNING
130 TRADING BAY RD. SUITE 330 KENAI, ALASKA 99611
T: 907.283.3998 WWW.KA-DESIGNSTUDIOS.COM

T3 ALASKA LLC
301 Calista Court, Suite 100
Anchorage, AK 99518
Ph: 907-562-7300 AEC L 1625
Mechanical & Electrical Engineering

Morrison Maierle
engineers · surveyors · planners · scientists

ALASKA REGIONAL FIRE TRAINING CENTER BUILDING REHABILITAION

BID DOCUMENTS

KENAI, ALASKA

Revisions:

STATE OF ALASKA 49TH THOMAS C. ALLEN EE-9877 07/31/19 REGISTERED PROFESSIONAL ENGINEER

Date: JULY 31, 2019
Drawn: MJM
Checked: TCA
Project: 2019.053.0
File Name: E1.1

Sheet Title:
ELECTRICAL SITE PLAN

Sheet:
E1.1

2 of 7E

© Copyright T3 Alaska, LLC

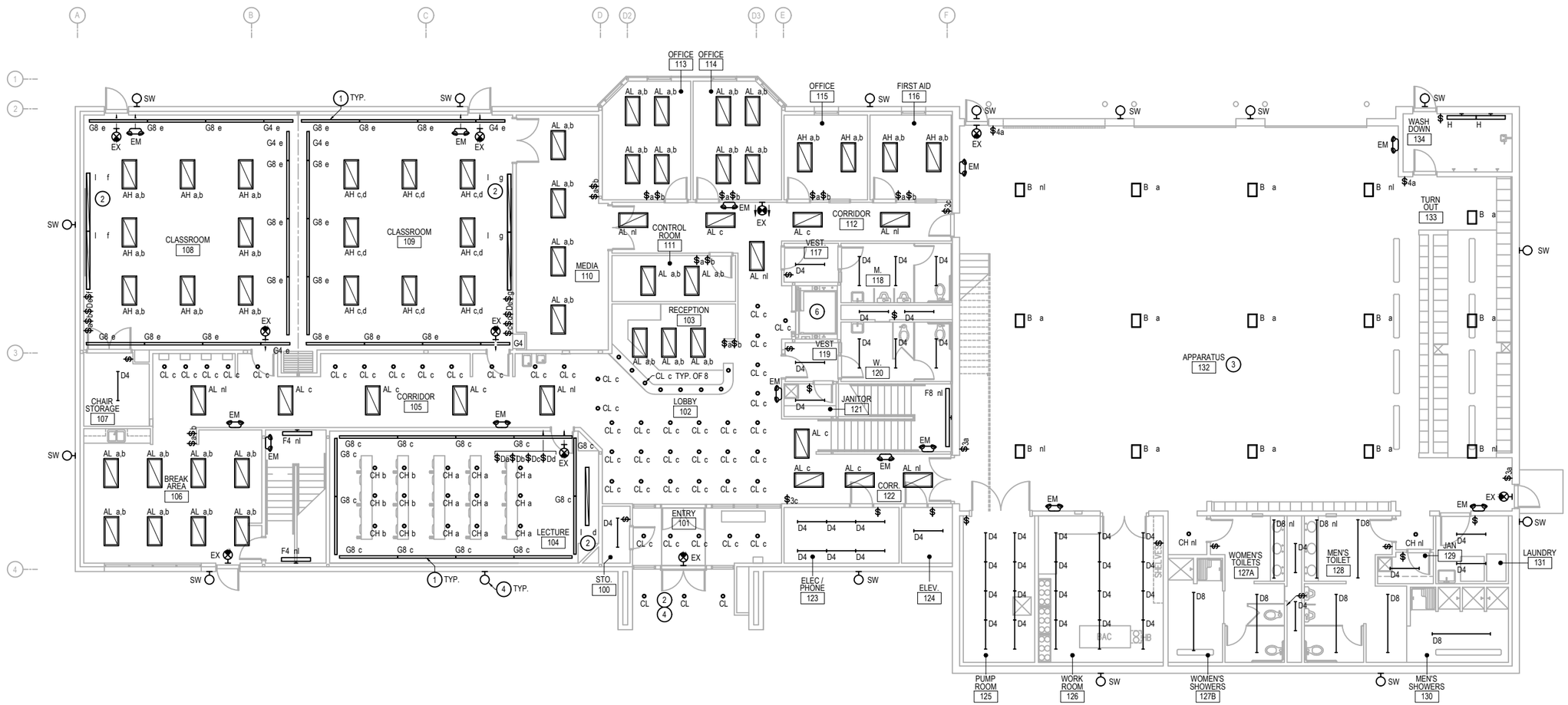

1 FIRST FLOOR LIGHTING PLAN

SCALE: 0 3' 12' 1' 6'

GENERAL NOTES

1. LIGHTING FIXTURES & SWITCHES ARE TO BE REPLACED ON A ONE-FOR-ONE BASIS WITH FIXTURES SPECIFIED. MAINTAIN EXISTING CIRCUITRY AT ALL EXISTING FIXTURE LOCATIONS WITH A NET DECREASE IN LOAD AT ALL LOCATIONS.
2. EXISTING FIXTURE LOCATIONS, QUANTITIES, & CONTROLS ARE BASED ON AS-BUILTS AND A NON-DESTRUCTIVE WALK THROUGH OF THE FACILITY ONLY. THE CONTRACTOR IS RESPONSIBLE FOR VERIFYING EXISTING CONDITIONS PRIOR TO THE START OF WORK.
3. THE CONTRACTOR SHALL PLAN FOR MINOR BRANCH CIRCUITRY WORK IN THE EXISTING WALLS TO PROVIDE FOR THE MOVEMENT OR EXTENSION OF EXISTING FIXTURE CONNECTION POINTS TO NEW FIXTURE CONNECTIONS POINTS.

SHEET NOTES

INDICATED BY: (#)

1. TYPE 'G4' & 'G8' FIXTURES ARE TO BE MOUNTED INSIDE OF EXISTING INDIRECT LIGHTING SOFFIT.
2. REPAIR CEILINGS IN LOCATIONS WHERE NEW FIXTURE DIMENSIONS MAY DIFFER FROM DEMOLISHED FIXTURE.
3. MAINTAIN APPARATUS BAY FIXTURE CONNECTIONS TO EXISTING LIGHTING CONTACTOR 'LC-C'.
4. MAINTAIN EXTERIOR FIXTURE TYPE 'SW' CONNECTIONS TO EXISTING LIGHTING CONTACTOR 'LC-A'.
5. MAINTAIN EXTERIOR CANOPY LIGHTING FIXTURE CONNECTIONS TO EXISTING LIGHTING CONTACTOR 'LC-A'.
6. EXISTING ELEVATOR PIT LIGHTING & CONTROLS TO REMAIN.

K+A designstudios
ARCHITECTURE + PLANNING
130 TRADING BAY RD. SUITE 330 KENAI, ALASKA 99611
T: 907.283.3698 WWW.KA-DESIGNSTUDIOS.COM

T3 ALASKA LLC
301 Calista Court, Suite 100
Anchorage, AK 99518
Ph: 907-563-7300 AEC L: 1625
Mechanical & Electrical Engineering

Morrison Maierle
engineers · surveyors · planners · scientists

ALASKA REGIONAL FIRE TRAINING CENTER BUILDING REHABILITAION

BID DOCUMENTS
KENAI, ALASKA

Revisions:

STATE OF ALASKA 49TH THOMAS C. ALLEN EE-9877 07/31/19 REGISTERED PROFESSIONAL ENGINEER

Date: JULY 31, 2019
Drawn: MJM
Checked: TCA
Project: 2019.053.0
File Name: E2.1

Sheet Title: FIRST FLOOR LIGHTING PLAN

Sheet: E2.1

3 of 7E

© Copyright T3 Alaska, LLC

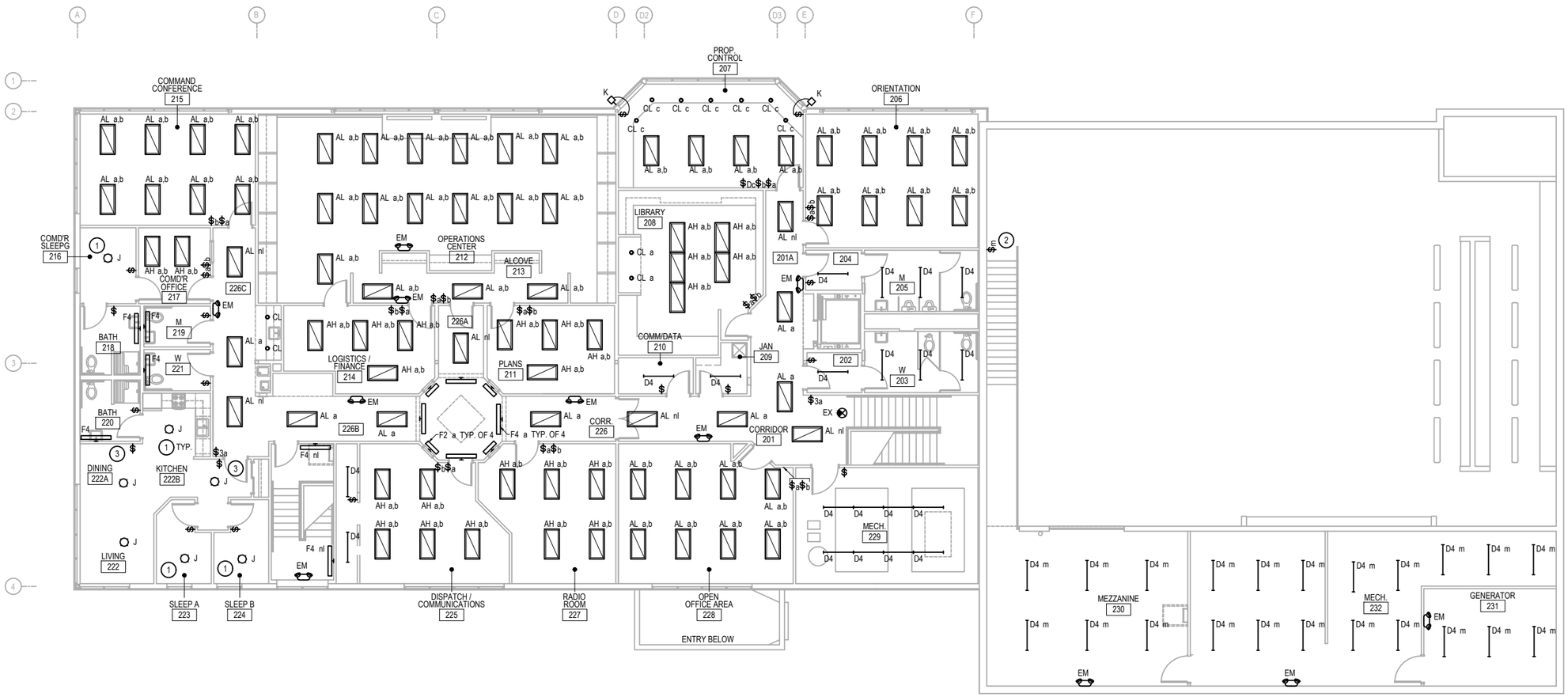

1 SECOND FLOOR LIGHTING PLAN

SCALE: 0 3' 12' 1' 6'

GENERAL NOTES

1. LIGHTING FIXTURES & SWITCHES ARE TO BE REPLACED ON A ONE-FOR-ONE BASIS WITH FIXTURES SPECIFIED. MAINTAIN EXISTING CIRCUITRY AT ALL EXISTING FIXTURE LOCATIONS WITH A NET DECREASE IN LOAD AT ALL LOCATIONS.
2. EXISTING FIXTURE LOCATIONS, QUANTITIES, & CONTROLS ARE BASED ON AS-BUILTS AND A NON-DESTRUCTIVE WALK THROUGH OF THE FACILITY ONLY. THE CONTRACTOR IS RESPONSIBLE FOR VERIFYING EXISTING CONDITIONS PRIOR TO THE START OF WORK.
3. THE CONTRACTOR SHALL PLAN FOR MINOR BRANCH CIRCUITRY WORK IN THE EXISTING WALLS TO PROVIDE FOR THE MOVEMENT OR EXTENSION OF EXISTING FIXTURE CONNECTION POINTS TO NEW FIXTURE CONNECTIONS POINTS.

SHEET NOTES

INDICATED BY: #

1. REPAIR CEILINGS IN LOCATIONS WHERE NEW FIXTURE DIMENSIONS MAY DIFFER FROM DEMOLISHED FIXTURE.
2. EXISTING SWITCH AT LOWER APPARATUS BAY LEVEL TO CONTROL MECHANICAL MEZZANINE FIXTURES AS INDICATED.
3. REPAIR/PATCH WALL AT SWITCH LOCATIONS NOTED.

K+A designstudios
ARCHITECTURE + PLANNING
130 TRADING BAY RD. SUITE 330 KENAI, ALASKA 99611
T: 907.283.3698 WWW.KA-DESIGNSTUDIOS.COM

T3 ALASKA LLC
301 Calista Court, Suite 100
Anchorage, AK 99518
Ph: 907-563-7300 AECL: 1625
Mechanical & Electrical Engineering

Morrison Maierle
engineers · surveyors · planners · scientists

ALASKA REGIONAL FIRE TRAINING CENTER BUILDING REHABILITAION

BID DOCUMENTS
KENAI, ALASKA

Revisions:

STATE OF ALASKA 49TH
THOMAS C. ALLEN
EE-9877
07/31/19
REGISTERED PROFESSIONAL ENGINEER

Date:	JULY 31, 2019
Drawn:	MJM
Checked:	TCA
Project:	2019.053.0
File Name:	E2.2

Sheet Title:
SECOND FLOOR LIGHTING PLAN

Sheet:
E2.2

© Copyright T3 Alaska, LLC

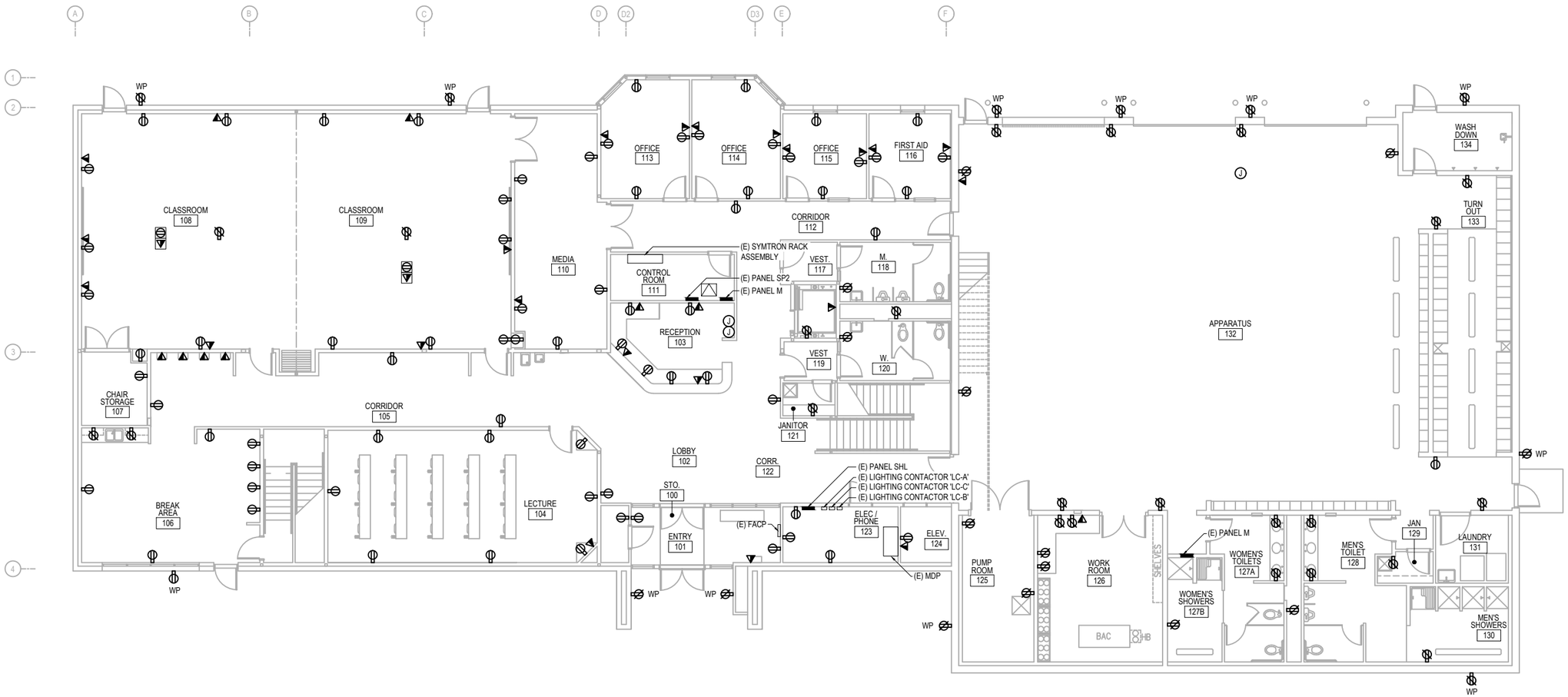

1 FIRST FLOOR POWER & SIGNAL PLAN

SCALE: 0 3' 12' 1' 6'

GENERAL NOTES

1. RECEPTACLES ARE TO BE REPLACED ON A ONE-FOR-ONE BASIS. ALL RECEPTACLES SHOWN ARE AT EXISTING LOCATIONS, REPLACE DEVICE AND FACE PLATE AND MAINTAIN EXISTING CIRCUITRY.
2. EXISTING DEVICE LOCATIONS & QUANTITIES ARE BASED ON AS-BUILTS AND A NON-DESTRUCTIVE WALK THROUGH OF THE FACILITY ONLY. CONTRACTOR IS RESPONSIBLE FOR VERIFYING EXISTING CONDITIONS PRIOR TO THE START OF WORK.
3. TELECOMMUNICATIONS OUTLET FACE PLATES ARE TO BE REPLACED ON A ONE-FOR-ONE BASIS. EXISTING TELECOMMUNICATIONS WIRING IS TO REMAIN.

K+A designstudios
ARCHITECTURE + PLANNING
130 TRADING BAY RD. SUITE 330 KENAI, ALASKA 99611
T: 907.283.3698 WWW.KA-DESIGNSTUDIOS.COM

T3 ALASKA LLC
Mechanical & Electrical Engineering
301 Calista Court, Suite 100
Anchorage, AK 99518
Ph: 907-865-7300 AEC L: 1625

Morrison Maierle
engineers · surveyors · planners · scientists

ALASKA REGIONAL FIRE TRAINING CENTER BUILDING REHABILITAION

BID DOCUMENTS
KENAI, ALASKA

Revisions:

STATE OF ALASKA 49TH THOMAS C. ALLEN EE-9877 07/31/19 REGISTERED PROFESSIONAL ENGINEER

Date: JULY 31, 2019
Drawn: MJM
Checked: TCA
Project: 2019.053.0
File Name: E3.1

Sheet Title: FIRST FLOOR POWER & SIGNAL PLAN

Sheet: E3.1

© Copyright T3 Alaska, LLC

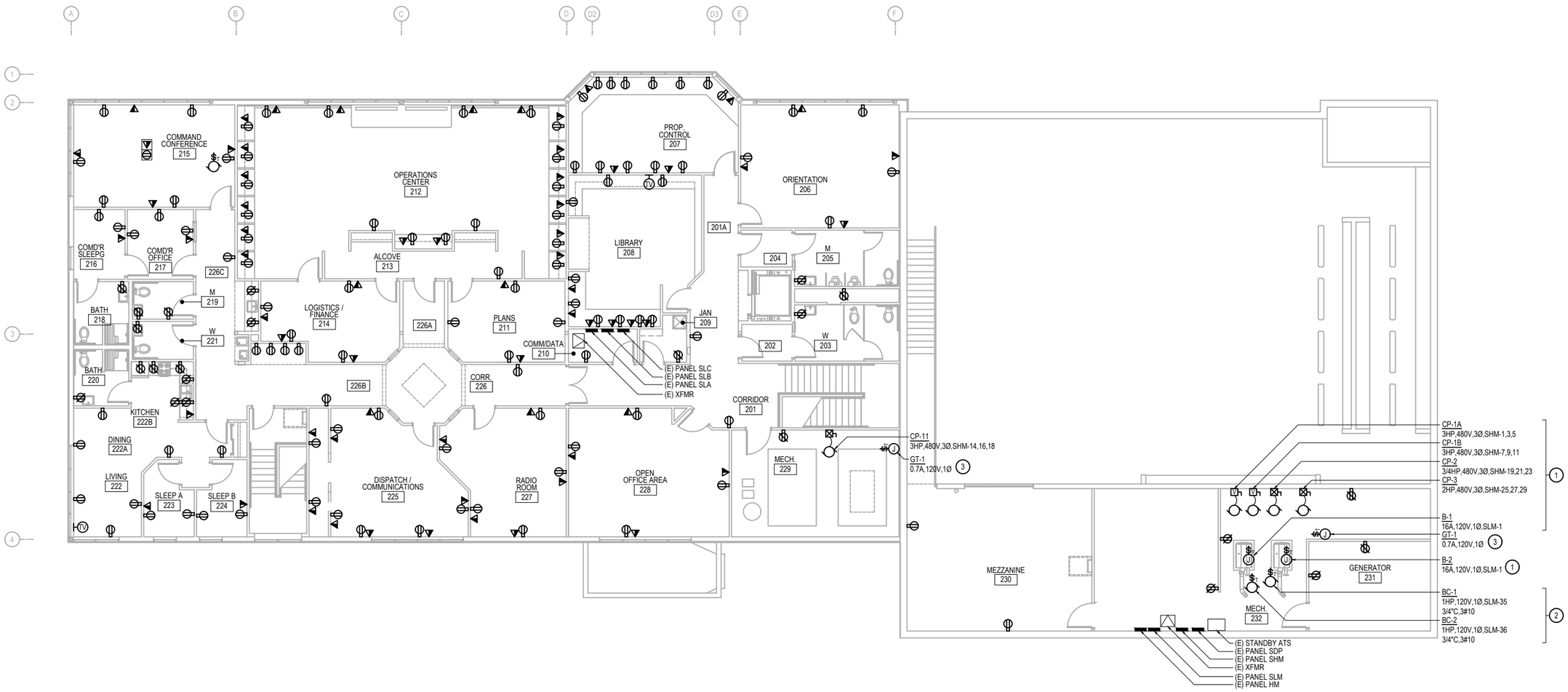

1 SECOND FLOOR POWER & SIGNAL PLAN

SCALE: 0 3' 12' 1' 6'

GENERAL NOTES

1. RECEPTACLES ARE TO BE REPLACED ON A ONE-FOR-ONE BASIS. ALL RECEPTACLES SHOWN ARE AT EXISTING LOCATIONS, REPLACE DEVICE AND FACE PLATE AND MAINTAIN EXISTING CIRCUITRY.
2. EXISTING DEVICE LOCATIONS & QUANTITIES ARE BASED ON AS-BUILTS AND A NON-DESTRUCTIVE WALK THROUGH OF THE FACILITY ONLY. CONTRACTOR IS RESPONSIBLE FOR VERIFYING EXISTING CONDITIONS PRIOR TO THE START OF WORK.
3. TELECOMMUNICATIONS OUTLET FACE PLATES ARE TO BE REPLACED ON A ONE-FOR-ONE BASIS. EXISTING TELECOMMUNICATIONS WIRING IS TO REMAIN.

SHEET NOTES

INDICATED BY: #

1. MECHANICAL EQUIPMENT NOTED IS TO BE REPLACED ONE A ONE-FOR-ONE BASIS, REUSE EXISTING CIRCUITRY AND CONDUCTORS.
2. PROVIDE NEW CIRCUIT BREAKERS, CONDUIT, & CONDUCTORS TO NEW PUMPS NOTED, SEE PANEL SCHEDULES.
3. REUSE EXISTING CONNECTIONS TO GLYCOL TANKS.

K+A designstudios
ARCHITECTURE + PLANNING
130 TRADING BAY RD. SUITE 330 KENAI, ALASKA 99611
T: 907.283.3698 WWW.KA-DESIGNSTUDIOS.COM

T3 ALASKA LLC
Mechanical & Electrical Engineering
301 Calista Court, Suite 100
Anchorage, AK 99518
Ph: 907-865-7900 AEC L: 1625

Morrison Maierle
engineers · surveyors · planners · scientists

ALASKA REGIONAL FIRE TRAINING CENTER BUILDING REHABILITAION

BID DOCUMENTS
KENAI, ALASKA

Revisions:

STATE OF ALASKA 49TH
THOMAS C. ALLEN
EE-9877
07/31/19
REGISTERED PROFESSIONAL ENGINEER

Date:	JULY 31, 2019
Drawn:	MJM
Checked:	TCA
Project:	2019.053.0
File Name:	E3.2

Sheet Title: SECOND FLOOR POWER & SIGNAL PLAN

Sheet: E3.2

© Copyright T3 Alaska, LLC

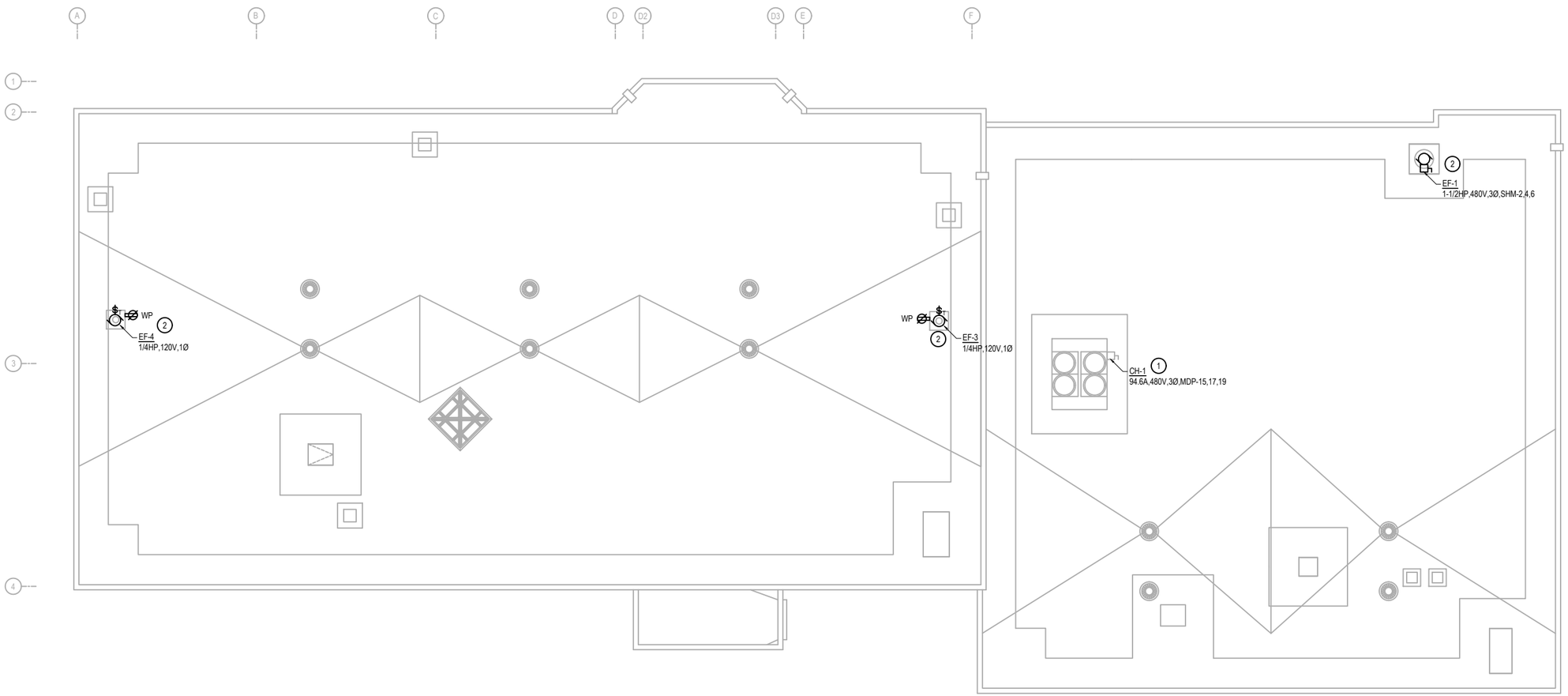

1 ROOFTOP POWER PLAN

SCALE: 0 3' 12'
1' 6'

GENERAL NOTES

1. RECEPTACLES ARE TO BE REPLACED ON A ONE-FOR-ONE BASIS. ALL RECEPTACLES SHOWN ARE AT EXISTING LOCATIONS, REPLACE DEVICE AND FACE PLATE AND MAINTAIN EXISTING CIRCUITRY.
2. EXISTING DEVICE LOCATIONS & QUANTITIES ARE BASED ON AS-BUILTS AND A NON-DESTRUCTIVE WALK THROUGH OF THE FACILITY ONLY. CONTRACTOR IS RESPONSIBLE FOR VERIFYING EXISTING CONDITIONS PRIOR TO THE START OF WORK.

SHEET NOTES

INDICATED BY: #

1. CAPTURE AND REUSE EXISTING CONDUCTORS FOR CHILLER REPLACEMENT. CIRCUIT BREAKER IN MDP FEEDING CHILLER IS TO BE REPLACED, SEE PANEL SCHEDULES. CIRCUIT BREAKER DISCONNECT IS INTEGRAL TO CHILLER UNIT.
2. EXHAUST FANS ON ROOF ARE TO BE REPLACED ON A ONE-FOR-ONE BASIS, MAINTAIN EXISTING CIRCUITRY & RECONNECT TO NEW EQUIPMENT & RECEPTACLES.

K+A designstudios
ARCHITECTURE + PLANNING
130 TRADING BAY RD. SUITE 330 KENAI, ALASKA 99611
T: 907.283.3698 WWW.KA-DESIGNSTUDIOS.COM

T3 ALASKA LLC
Mechanical & Electrical Engineering
301 Calista Court, Suite 100
Anchorage, AK 99518
Ph: 907-562-7300 AEC L 1625

Morrison Maierle
engineers · surveyors · planners · scientists

ALASKA REGIONAL FIRE TRAINING CENTER BUILDING REHABILITAION

BID DOCUMENTS
KENAI, ALASKA

Revisions:

STATE OF ALASKA 49TH
THOMAS C. ALLEN
EE-9877
07/31/19
REGISTERED PROFESSIONAL ENGINEER

Date: JULY 31, 2019
Drawn: MJM
Checked: TCA
Project: 2019.053.0
File Name: E3.3

Sheet Title:
ROOFTOP POWER PLAN

Sheet:
E3.3

© Copyright T3 Alaska, LLC

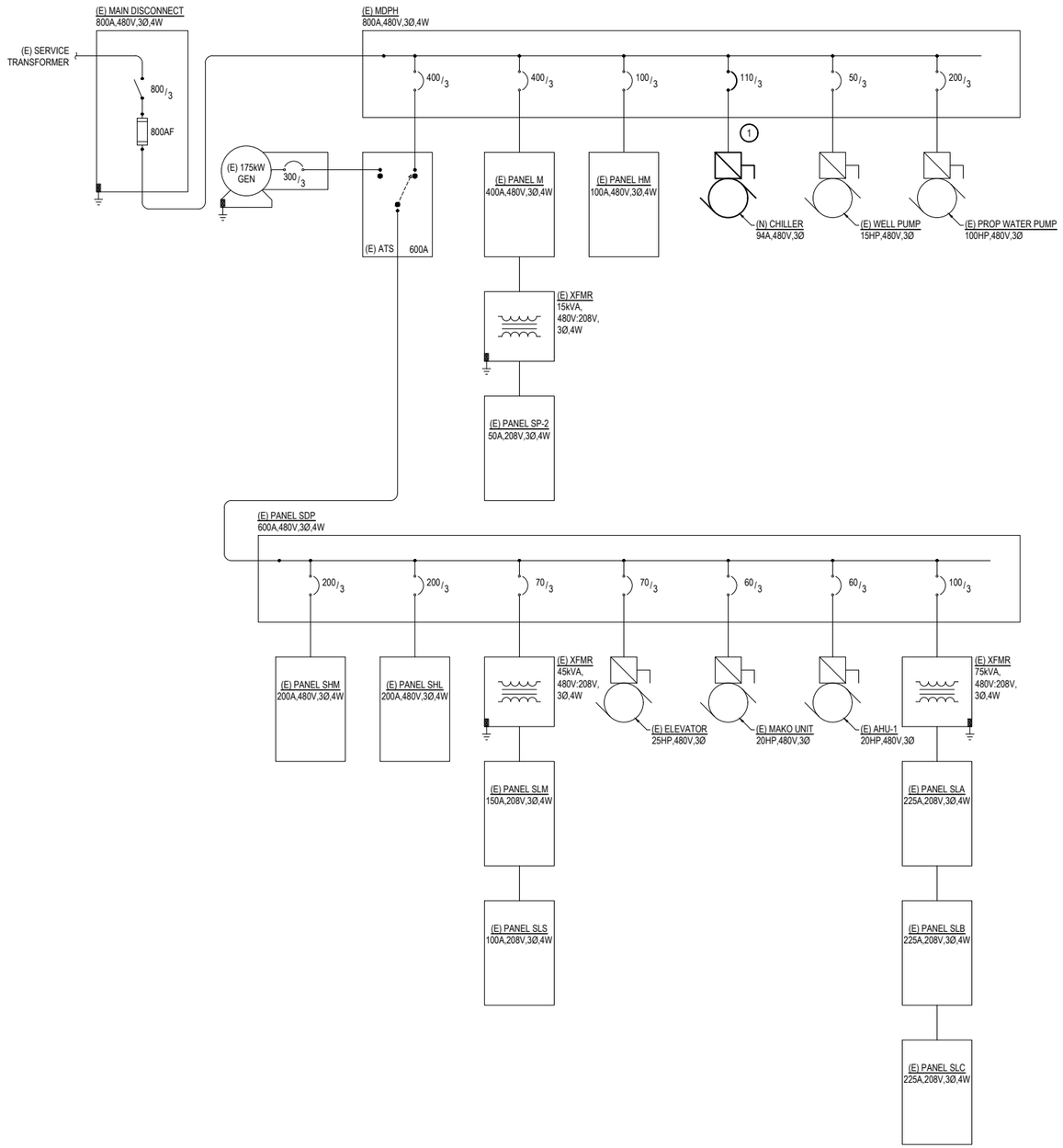

1 ELECTRICAL SINGLE LINE DIAGRAM

SCALE: NTS

GENERAL NOTES

1. ALL FEEDERS ARE EXISTING TO REMAIN UNLESS NOTED OTHERWISE.

SHEET NOTES

INDICATED BY: (#)

1. EXISTING CHILLER IS TO BE REPLACED, REUSE EXISTING CONDUIT & CONDUCTORS. REPLACE CIRCUIT BREAKER AS INDICATED, REFERENCE PANEL SCHEDULES.

EXISTING MDP

VOLTAGE: 277/480V,3PH,4W | AMPERE RATING: 800 A
MOUNTING: SURFACE | MAIN CIRCUIT BREAKER RATING: MLO
SUPPLIED FROM: SERVICE DISCONNECT | SHORT CIRCUIT CURRENT RATING (SCCR): 25,000 A

	CKT	AMP	POLE	LOAD DESCRIPTION	PHASE A VA		PHASE B VA		PHASE C VA		LOAD DESCRIPTION	POLE	AMP	CKT	
	1	-	1	SPACE							SPACE	1	-	2	
	3	-	1	SPACE							SPACE	1	-	4	
	5	-	1	SPACE							SPACE	1	-	6	
	7	-	1	SPACE		72,537							400	8	
	9	100					5,600	72,537			PANEL SDP-1			10	E
E	11			PANEL HM					5,600	72,537		3		12	
	13		3		5,600	55,333							400	14	
	15	110					26,204	55,333			PANEL M			16	E
N	17			CHILLER (ON ROOF)					26,204	55,333		3		18	
	19		3		26,204						SPACE	1	-	20	
	21	200					34,348				SPACE	1	-	22	
E	23			FIRE PUMP					34,348		SPACE	1	-	24	
	25		3		34,348						SPACE	1	-	26	
	27	-	20	SPACE							SPACE	1	-	28	
	29	50							5,817		SPACE	1	-	30	
E	31			DEEP WELL SUPPLY WATER	5,817						SPACE	1	-	32	
	33		3				5,817				SPACE	1	-	34	
	35	-	1	SPACE							SPACE	1	-	36	
	37	-	1	SPACE							SPACE	1	-	38	
	39	-	1	SPACE							SPACE	1	-	40	
CONNECTED LOAD (VA)					199,840		199,840		199,840		599,519 VA				
CONNECTED LOAD (AMPERES)					721		721		721		721 A				
DEMAND LOAD (VA) *					208,427		208,427		208,427		625,280 VA				
DEMAND LOAD (AMPERES) *					752		752		752		752 A				

E - EXISTING LOAD TO REMAIN, R - RECONFIGURED LOAD ON EXISTING CIRCUIT BREAKER, N - NEW CIRCUIT BREAKER & LOAD

* - DEMAND LOAD CALCULATED WITH LARGEST MOTOR LOAD AT 125%

EXISTING PANEL SHM

VOLTAGE: 277/480V,3PH,4W | AMPERE RATING: 250 A
MOUNTING: SURFACE | MAIN CIRCUIT BREAKER RATING: MLO
SUPPLIED FROM: PANEL SDP | SHORT CIRCUIT CURRENT RATING (SCCR): 18,000 A

	CKT	AMP	POLE	LOAD DESCRIPTION	PHASE A VA		PHASE B VA		PHASE C VA		LOAD DESCRIPTION	POLE	AMP	CKT	
	1	15			1,330	831							15	2	
R	3			CP-1A			1,330	831			EF-1			4	R
	5		3						1,330	831		3		6	
	7	15			1,330	300							15	8	
R	9			CP-1B			1,330	300			CP-9			10	E
	11		3						1,330	300		3		12	
	13	20			1,700	1,330							15	14	
E	15			MAU			1,700	1,330			CP-11			16	R
	17		3						1,700	1,330		3		18	
	19	15			443	300							15	20	
R	21			CP-2			443	300			EF-2			22	R
	23		3						443	300		3		24	
	25	15			942	1,000							15	26	
R	27			CP-3			942	1,000			AIR COMPRESSOR			28	E
	29		3						942	1,000		3		30	
	31	15											15	32	
E	33			SPARE							SPARE			34	E
	35		3									3		36	
	37	20											15	38	
E	39			SPARE							SPARE			40	E
	41		3									3		42	
CONNECTED LOAD (VA)					9,505		9,505		9,505		28,514 VA				
CONNECTED LOAD (AMPERES)					34		34		34		34 A				
DEMAND LOAD (VA) *					8,600		8,600		8,600		25,801 VA				
DEMAND LOAD (AMPERES) *					31		31		31		31 A				

E - EXISTING LOAD TO REMAIN, R - RECONFIGURED LOAD ON EXISTING CIRCUIT BREAKER, N - NEW CIRCUIT BREAKER & LOAD

* - DEMAND LOAD CALCULATED WITH LARGEST MOTOR LOAD AT 125%, CP-1A & CP-1B ARE REDUNDANT LOADS.

EXISTING PANEL SLM

VOLTAGE: 120/208V,3PH,4W | AMPERE RATING: 150 A
MOUNTING: SURFACE | MAIN CIRCUIT BREAKER RATING: 150 A
SUPPLIED FROM: PANEL SDP VIA 45kVA XFMR | SHORT CIRCUIT CURRENT RATING (SCCR): 10,000 A

	CKT	AMP	POLE	LOAD DESCRIPTION	PHASE A VA		PHASE B VA		PHASE C VA		LOAD DESCRIPTION	POLE	AMP	CKT	
R	1	20	1	B-1	1,656	100					LCP PANEL	1	20	2	E
R	3	20	1	B-2			1,656	1,080			REC - 230 & 132	1	20	4	E
E	5	20	1	CP-4					528	860	APPARATUS BAY CEILING FAN, REC - 230, 231	1	20	6	E
E	7	20	1	WATER HEATER & GP-1	1,000	360					REC - EXISTING	1	20	8	E
E	9	20	1	CP-5, CP-10			1,000	360			REC - EXISTING	1	20	10	E
E	11	20	1	AIR COMPRESSOR					200	180	REC - EXISTING	1	20	12	E
E	13	20	1	GEN HEATER	1,000	200					CORD REEL	1	20	14	E
E	15	20	1	B-3			1,000				SPARE	1	20	16	E
E	17	20	1	B-4					1,000		SPARE	1	20	18	E
E	19	20	1	GFUH	1,000						SPARE	1	20	20	E
E	21	20	1	GFUH			1,000				SPARE	1	20	22	E
E	23	20	1	CAMERA CONTROL, 207					200		SPARE	1	20	24	E
E	25	20	1	EXISTING LOAD	1,500	1,000					OVERHEAD DOOR 1	1	20	26	E
E	27	20	1	CP-4			1,000	1,000			OVERHEAD DOOR 2	1	20	28	E
E	29	20	1	3HP AIR COMPRESSOR AIR DRYER					1,500	1,000	OVERHEAD DOOR 3	1	20	30	E
E	31	20	1	SF-1	900	1,500					5HP AIR DRYER & COMPRESSOR	1	20	32	E
E	33	20	1	SF-2			900	500			VIESMAN BOILER CONTROL	1	20	34	E
N	35	30	1	BC-1					800	800	BC-2	1	30	36	N
	37	100			3,333	2,400							30	38	
E	39			PANEL SLS			3,333	2,400			WASHER			40	E
	41		3						3,333	2,400		3		42	
CONNECTED LOAD (VA)					15,949		15,229		12,801		43,980 VA				
CONNECTED LOAD (AMPERES)					133		127		107		122 A				
DEMAND LOAD (VA) *					16,549		15,829		13,401		45,780 VA				
DEMAND LOAD (AMPERES) *					138		132		112		127 A				

E - EXISTING LOAD TO REMAIN, R - RECONFIGURED LOAD ON EXISTING CIRCUIT BREAKER, N - NEW CIRCUIT BREAKER & LOAD

* - DEMAND LOAD CALCULATED WITH LARGEST MOTOR LOAD AT 125%

K+A designstudios
ARCHITECTURE + PLANNING
130 TRADING BAY RD. SUITE 330 KENAI, ALASKA 99611
T: 907.283.3998 WWW.KA-DESIGNSTUDIOS.COM

T3 ALASKA LLC
Mechanical & Electrical Engineering
301 Calista Court, Suite 100
Anchorage, AK 99518
Ph: 907-563-7300 ASCL: 1625

Morrison Maierle
engineers - surveyors - planners - scientists

ALASKA REGIONAL FIRE TRAINING CENTER BUILDING REHABILITAION

BID DOCUMENTS
KENAI, ALASKA

Revisions:

STATE OF ALASKA 49TH THOMAS C. ALLEN EE-9877 07/31/19 REGISTERED PROFESSIONAL ENGINEER

Date: JULY 31, 2019
Drawn: MJM
Checked: TCA
Project: 2019.053.0
File Name: E5.1

Sheet Title: SINGLE LINE DIAGRAM & PANEL SCHEDULES

Sheet: E5.1

© Copyright T3 Alaska, LLC